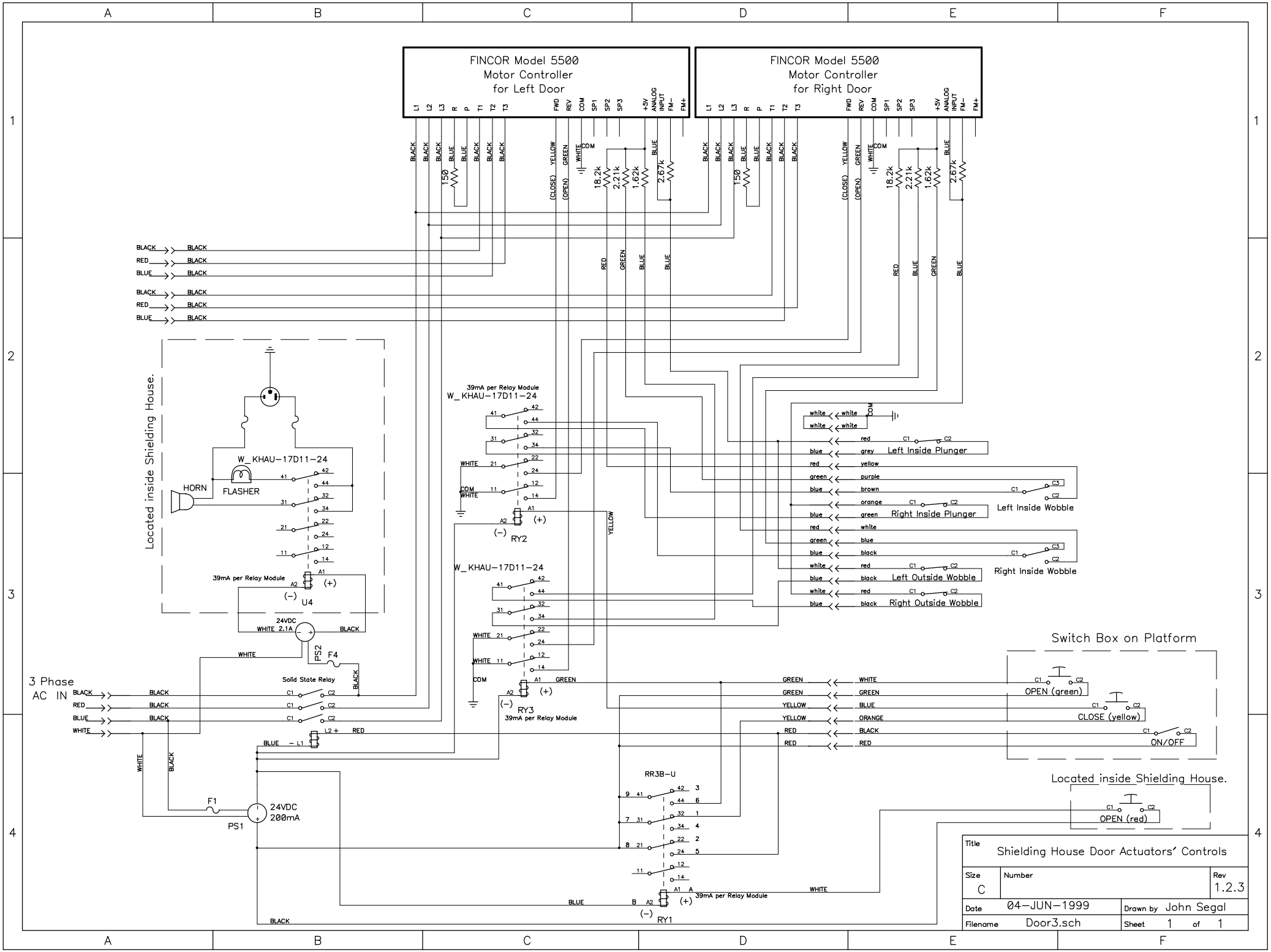
FINCOR Model 5500
Motor Controller
for Left Door
FINCOR Model 5500
Motor Controller
for Right Door
L1 L2 L3 R P T1 T2 T3 FWD REV COM SP1 SP2 SP3 +5V ANALOG INPUT FM− FM+
150
18.2k
2.21k
1.62k
2.67k
(CLOSE) YELLOW
(OPEN) GREEN
COM
Located inside Shielding House.
HORN
FLASHER
W_KHAU−17D11−24
39mA per Relay Module
U4
RY2
RY3
RY1
24VDC
WHITE 2.1A
BLACK
PS2
F4
Solid State Relay
3 Phase
AC IN
L2 +
− L1
F1
PS1
24VDC
200mA
RR3B−U
Left Inside Plunger
Left Inside Wobble
Right Inside Plunger
Right Inside Wobble
Left Outside Wobble
Right Outside Wobble
Switch Box on Platform
OPEN (green)
CLOSE (yellow)
ON/OFF
Located inside Shielding House.
OPEN (red)
Title
Shielding House Door Actuators' Controls
Size
C
Number
Rev
1.2.3
Date
04−JUN−1999
Drawn by
John Segal
Filename
Door3.sch
Sheet
1
of
1