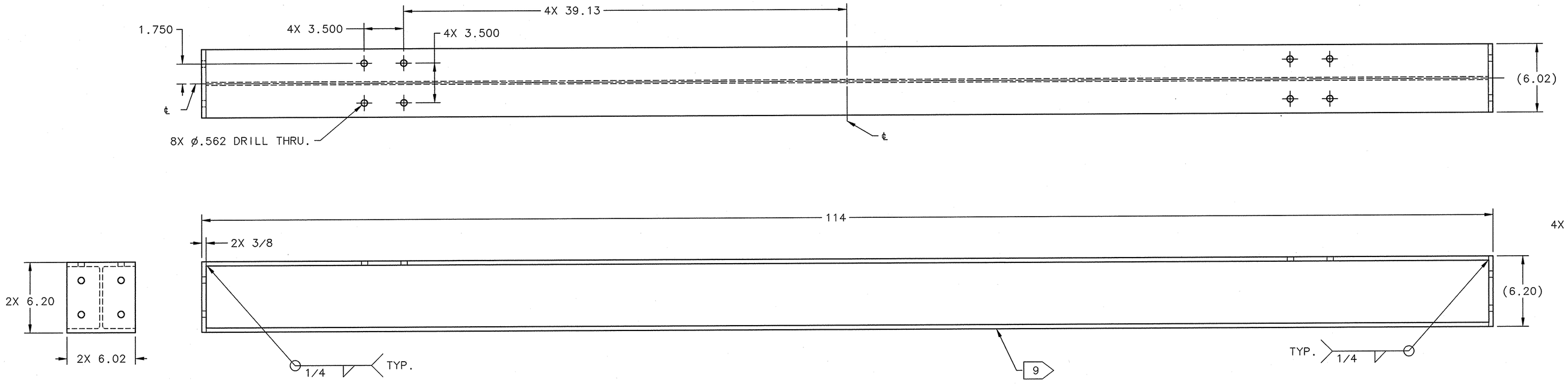

-04 CROSS BRACE

MATERIAL: A36 STEEL
SCALE: 1/4

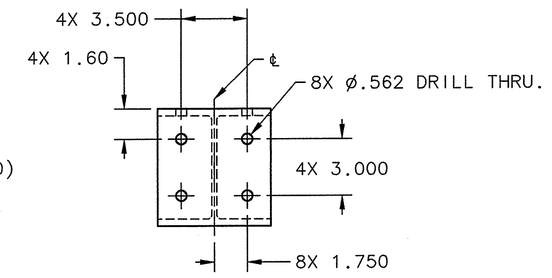

END DETAIL

BOTH ENDS

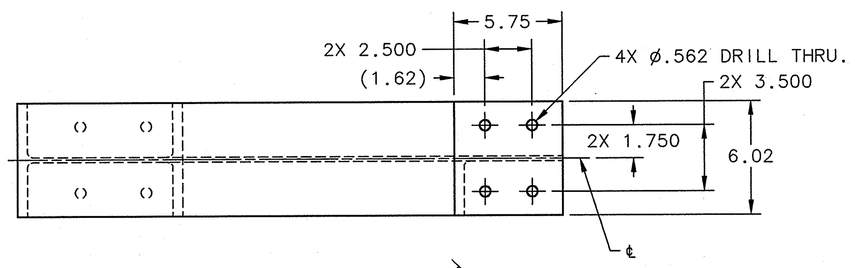

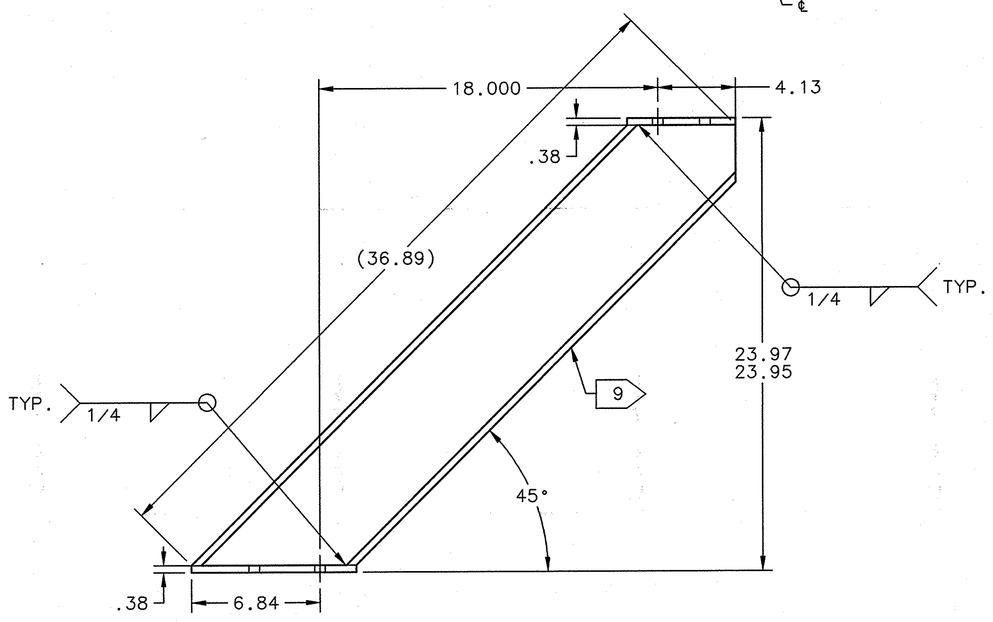

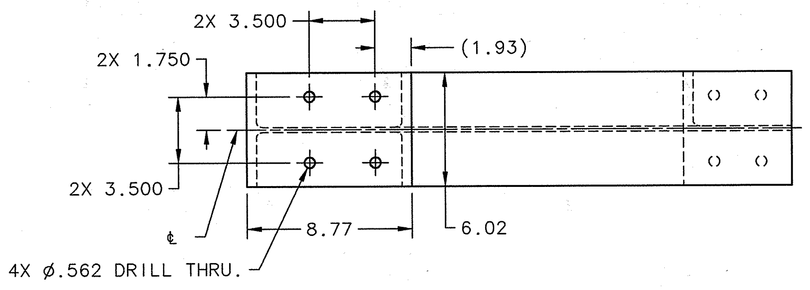

-05 DIAGONAL BRACE

MATERIAL: A36 STEEL
SCALE: 1/4

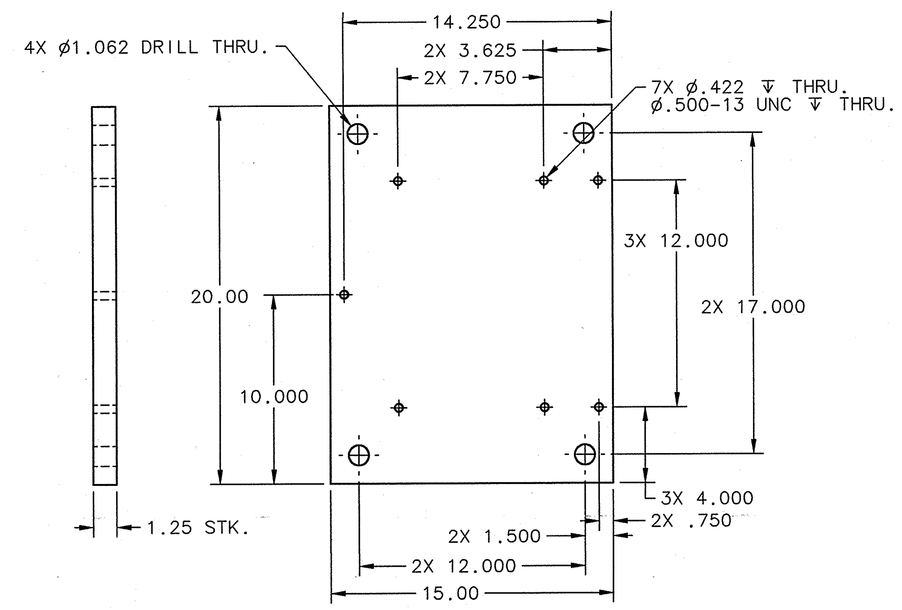

-08 FLOOR PAD

MATERIAL: A36 STEEL
SCALE: 1/4

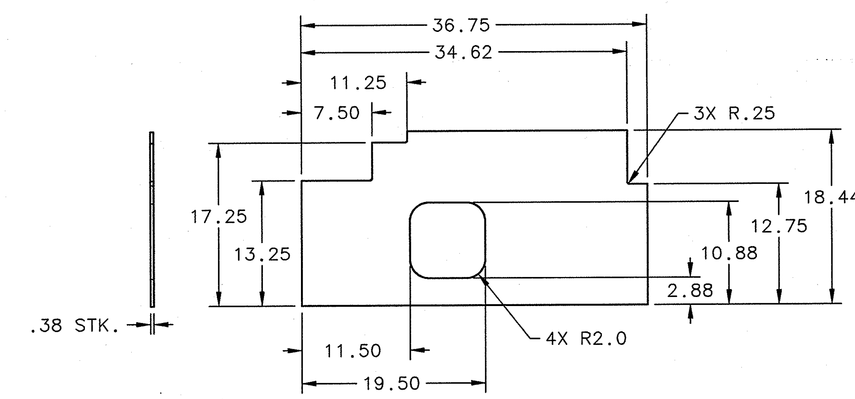

-06 SMALL CUT PLATE

MATERIAL: ALUMINUM
SCALE: 1/8

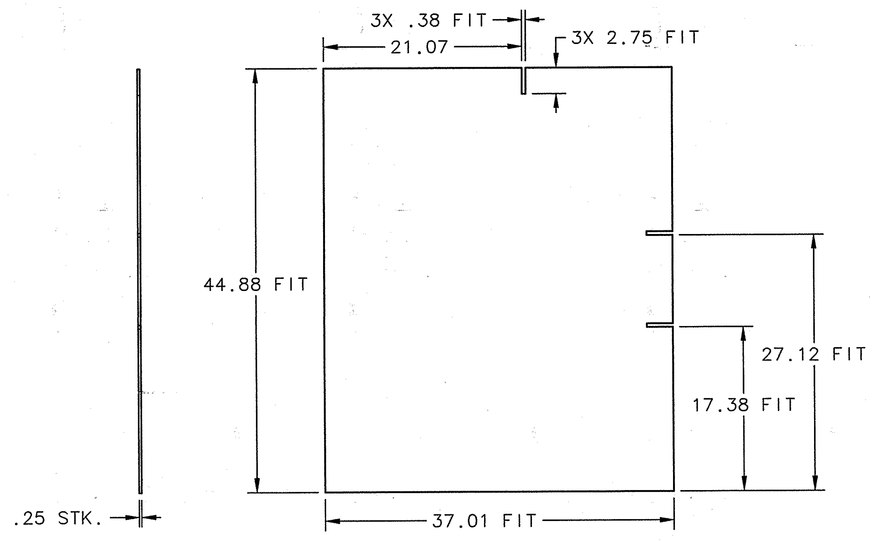

-09 INNER DIVIDER PLATE

MATERIAL: A36 STEEL
SCALE: 1/8

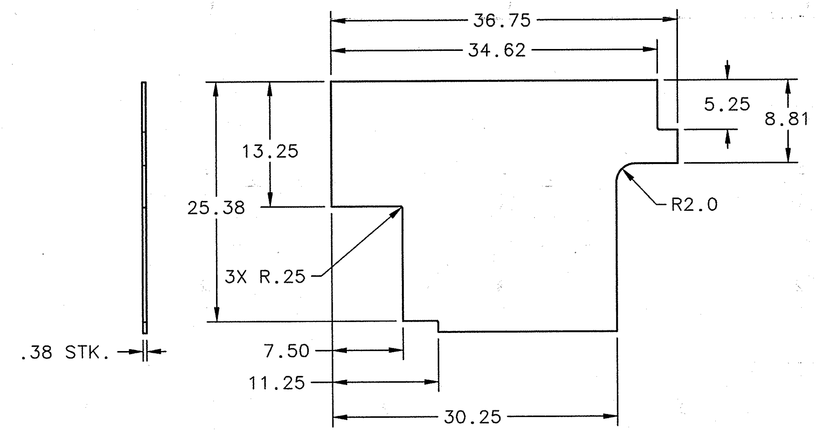

-07 LARGE CUT PLATE

MATERIAL: ALUMINUM
SCALE: 1/8

SIZE	DWG. NO.	REV.
E	67501-00020	–
SCALE NOTED	USED ON ASSY NO. 67501-00000	SHEET 4 OF 4