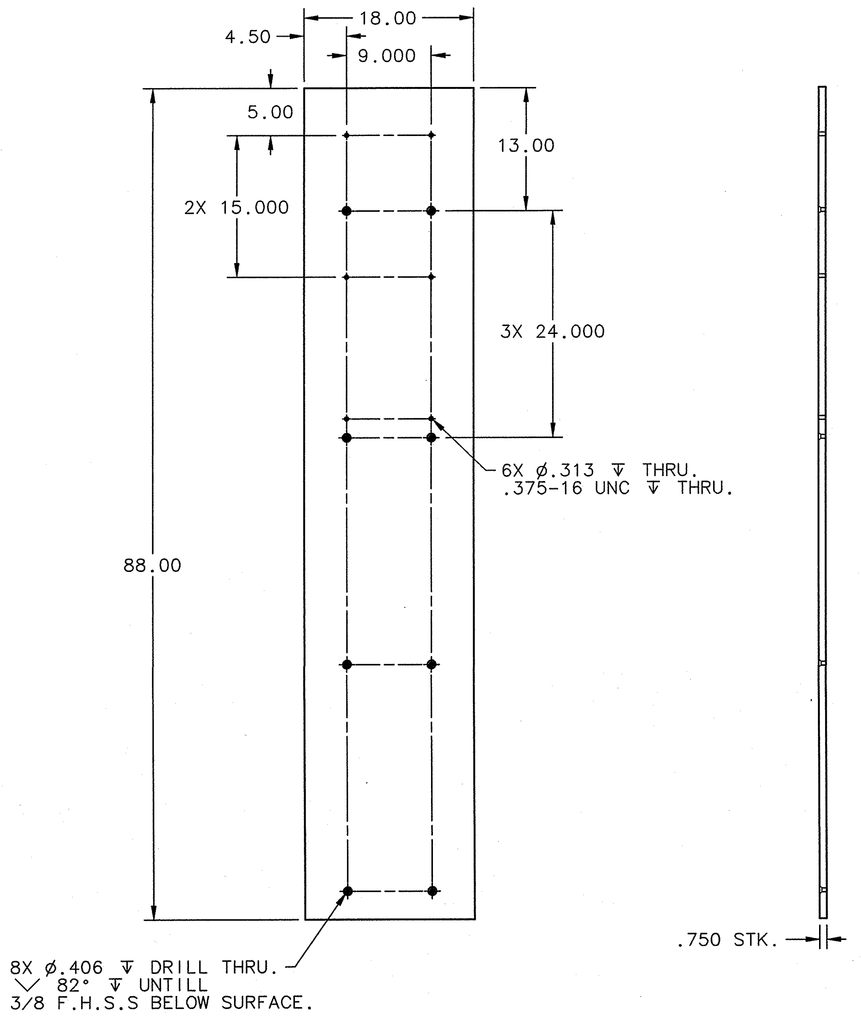


-07 ALUMINUM SIDE

SCALE: 1/8

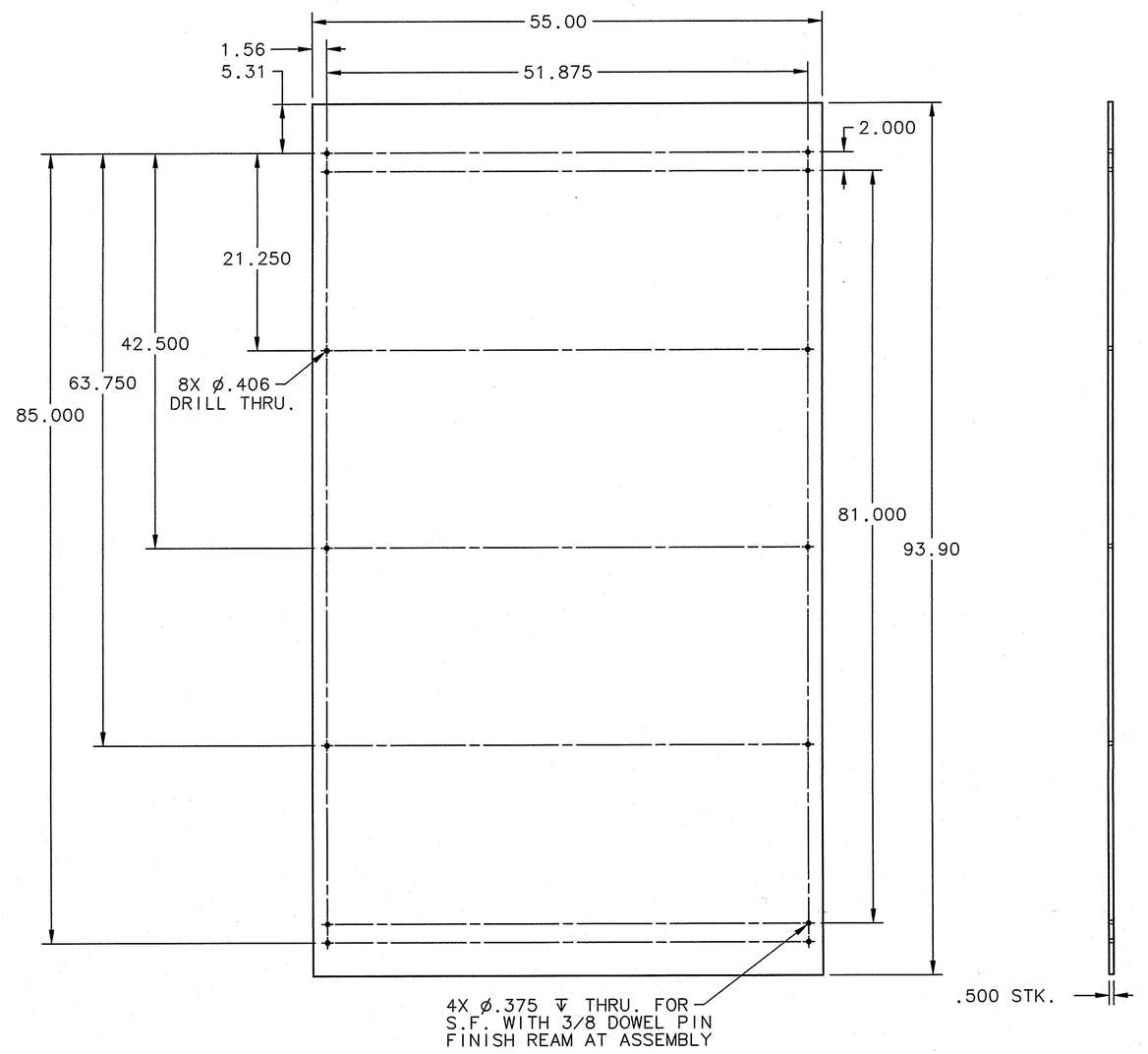


-05 ALUMINUM BLANK FRONT PLATE

SCALE: 1/8

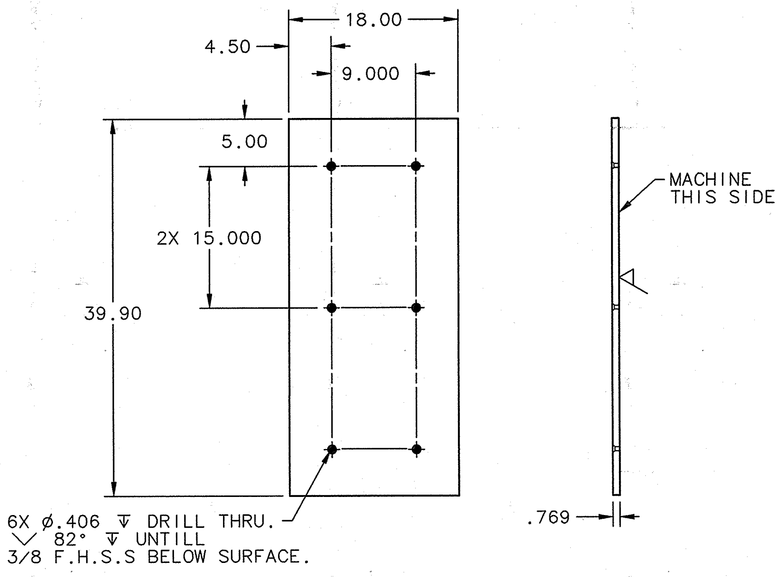


-08 RCS ALUMINUM SIDE PLATE

SCALE: 1/8

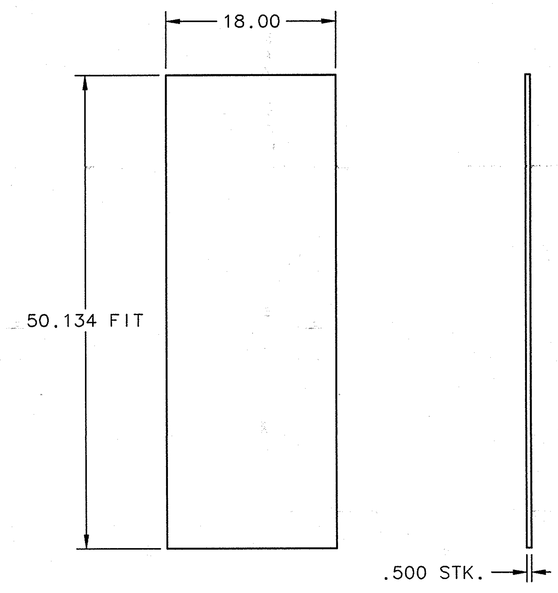


-06 ALUMINUM BASE

SCALE: 1/8

| SIZE | DWG. NO. | REV. |
|---|---|---|
| E | 67501-00030 | – |
| SCALE NOTED | USED ON ASST NO. 67501-00000 | SHEET 5 OF 5 |