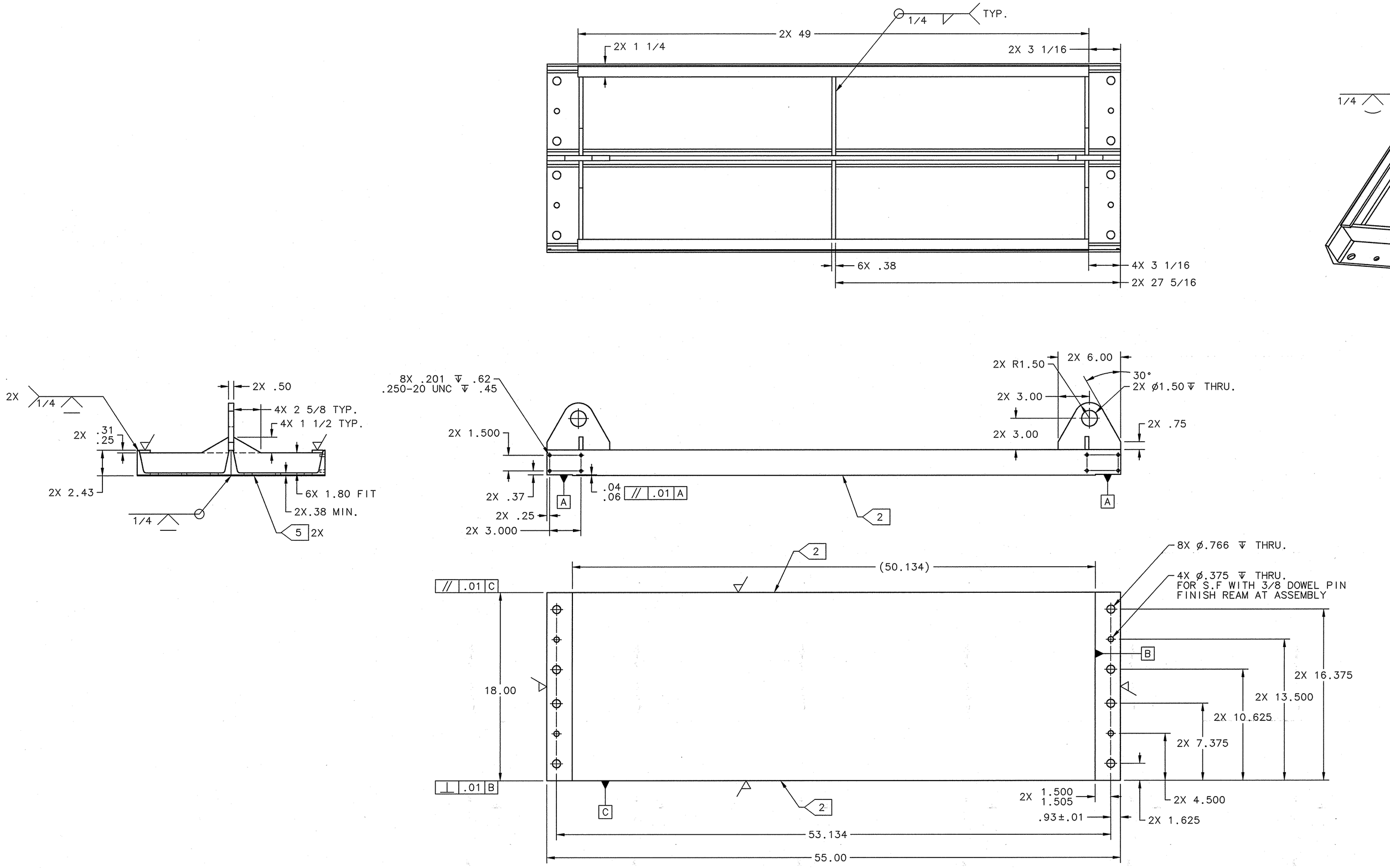

ISO VIEW

-04 CALORIMETER FRAME TOP

SCALE: 1/4

SIZE	DWG. NO.	REV.
E	67501-00030	–
SCALE NOTED	USED ON ASST NO. 67501-00000	SHEET 4 OF 5