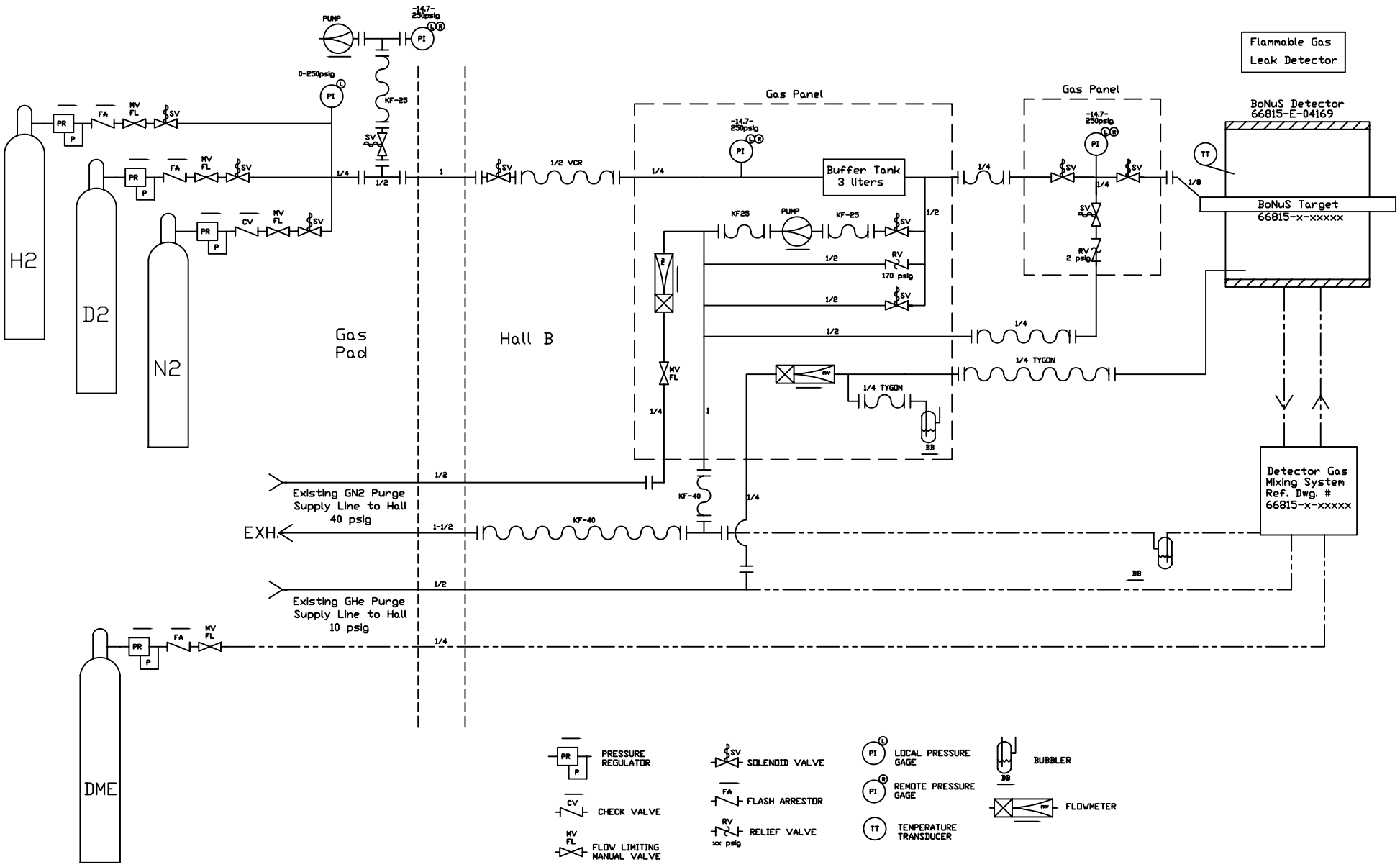
Flammable Gas
Leak Detector
BoNuS Detector
66815-E-04169
BoNuS Target
66815-x-xxxxx
Gas Panel
Gas Panel
Buffer Tank
3 liters
PUMP
-14.7-
250psig
0-250psig
KF-25
1/2 VCR
KF25
KF-25
170 psig
2 psig
1/4 TYGON
1/4 TYGON
KF-40
KF-40
H2
D2
N2
DME
Gas
Pad
Hall B
Existing GN2 Purge
Supply Line to Hall
40 psig
EXH
Existing GHe Purge
Supply Line to Hall
10 psig
Detector Gas
Mixing System
Ref. Dwg. #
66815-x-xxxxx
PRESSURE
REGULATOR
CHECK VALVE
FLOW LIMITING
MANUAL VALVE
SOLENOID VALVE
FLASH ARRESTOR
RELIEF VALVE
xx psig
LOCAL PRESSURE
GAGE
REMOTE PRESSURE
GAGE
TEMPERATURE
TRANSDUCER
BUBBLER
FLOWMETER