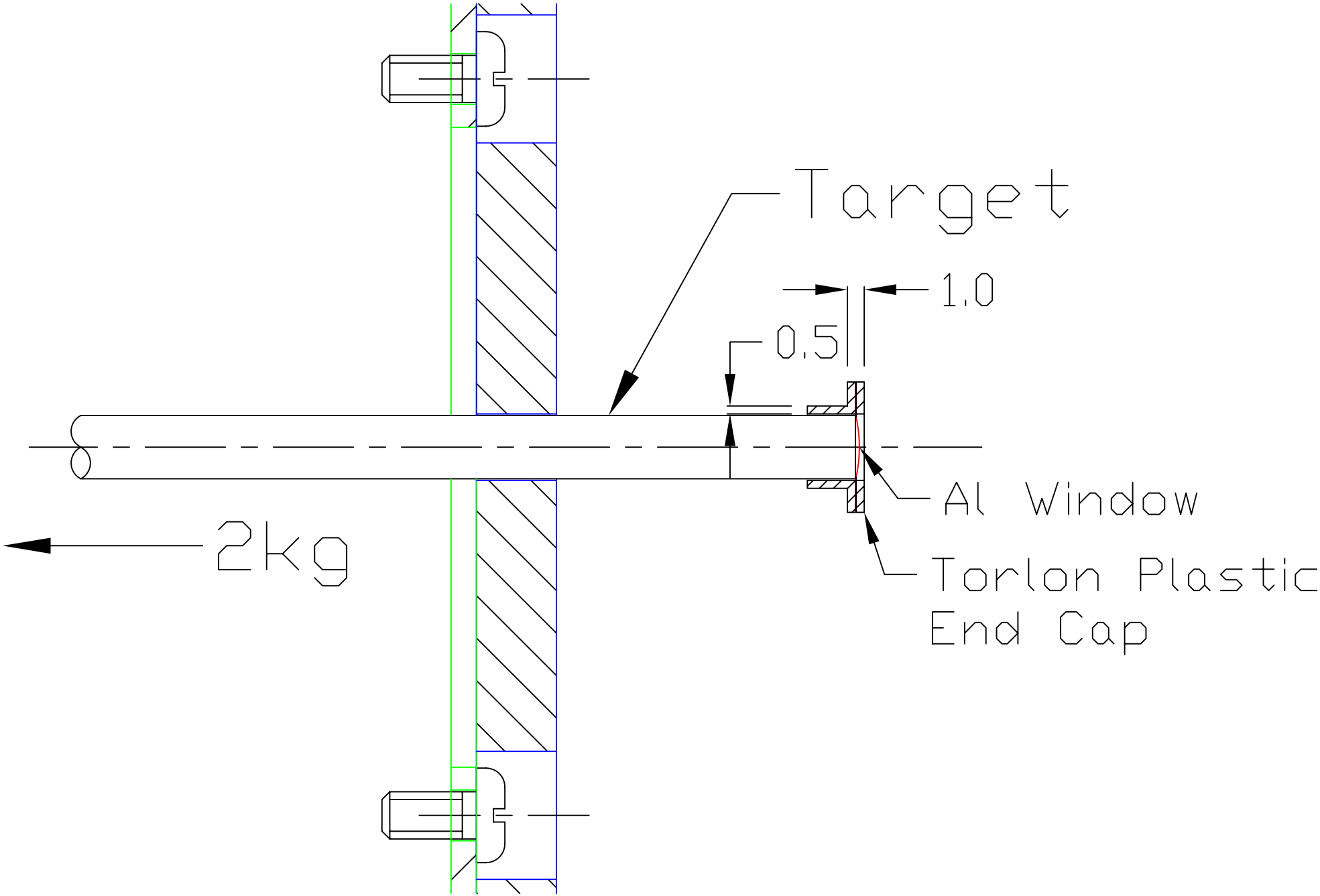
Target
1.0
0.5
Al Window
2kg
Torlon Plastic
End Cap