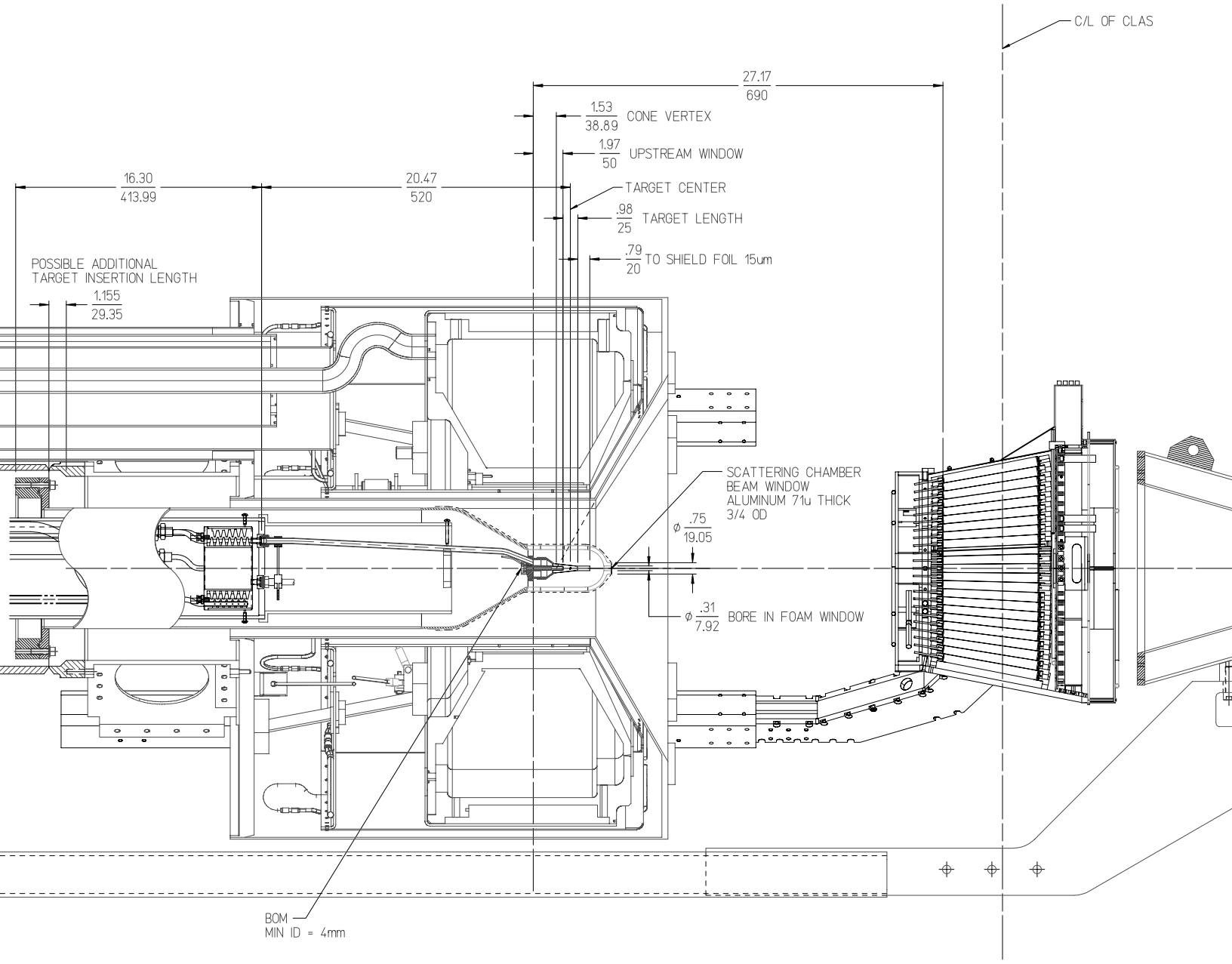
C/L OF CLAS
27.17
690
1.53
38.89
CONE VERTEX
1.97
50
UPSTREAM WINDOW
16.30
413.99
20.47
520
TARGET CENTER
.98
25
TARGET LENGTH
.79
20
TO SHIELD FOIL 15um
POSSIBLE ADDITIONAL
TARGET INSERTION LENGTH
1.155
29.35
SCATTERING CHAMBER
BEAM WINDOW
ALUMINUM 71u THICK
3/4 OD
ϕ .75
19.05
ϕ .31
7.92
BORE IN FOAM WINDOW
BOM
MIN ID = 4mm