REVISION HISTORY				
ZONE	REV	DESCRIPTION	DATE	APPROVED

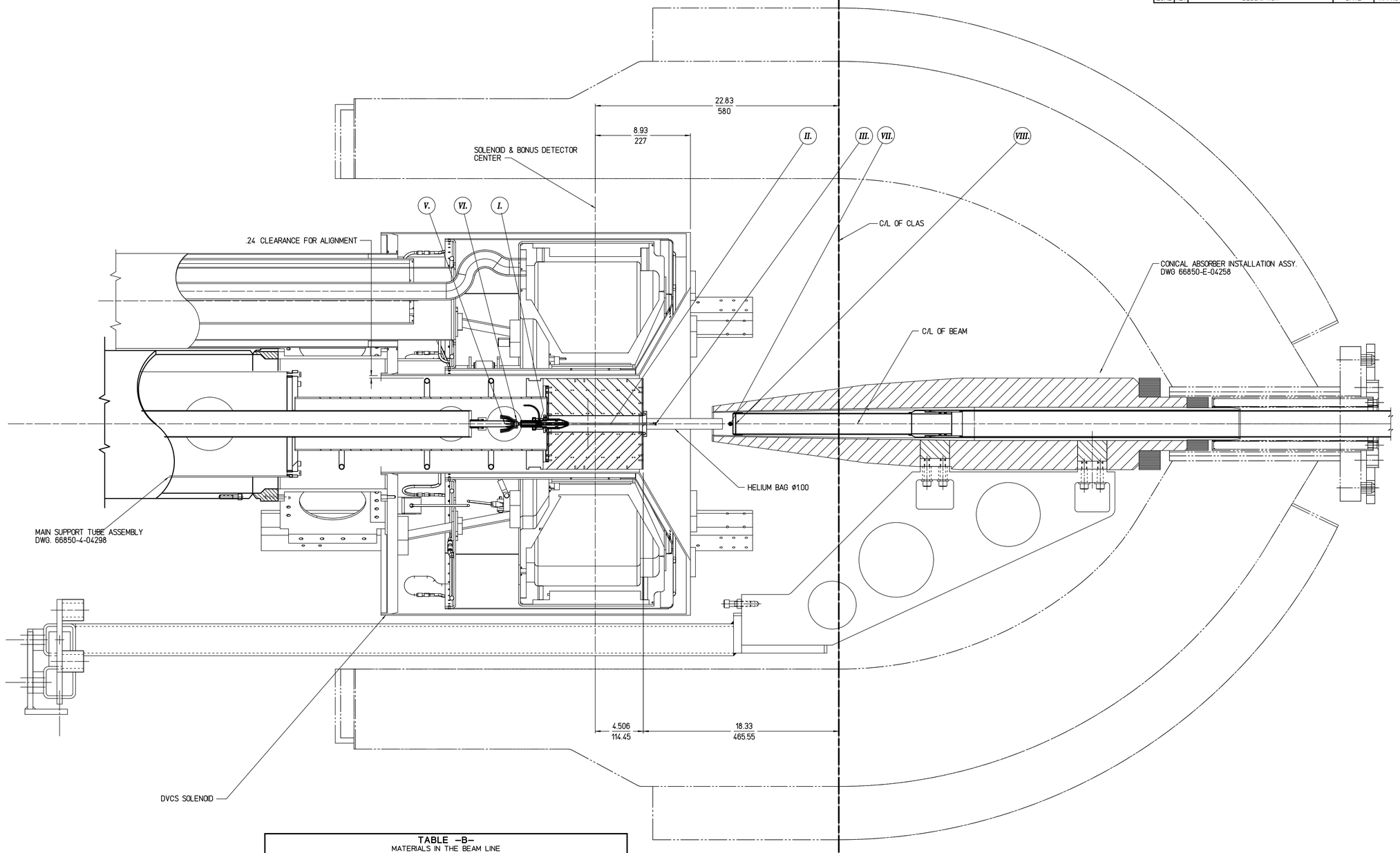

TABLE –B–
MATERIALS IN THE BEAM LINE

ITEM	DESCRIPTION	"Z" LOCATION (cm)	MATERIAL	THICKNESS (cm)	INSIDE DIA (mm)	NOTES	DWG. NO.
I.	TARGET CELL INLET WINDOW	-71.79	ALUM.	15 microns	4.0	-	66850-A-04367
II.	TARGET GAS	N/A	D_2	28.67 microns	4.0	-	-
III.	TARGET CELL EXIT WINDOW	-43.56	ALUM.	25 microns	4.0	-	-
IV.							
V.	UPSTREAM BEAM PIPE w/ WINDOW	-77.76	ALUM.	20 microns	12	-	66850-D-04287
VI.	BEAM OFFSET MONITOR	-75.66 TO -72.16	GLASS	4.0	4.0	-	66850-C-043XX
VII.	AIR GAP	-30.44 TO -24.56	N/A	N/A	N/A	-	-
VIII.	DOWNSTREAM BEAM PIPE VACUUM WINDOW	-24.56	ALUM.	71 microns	28.4	-	-

PRELIMINARY

EACH SHEET OF A MULTI-SHEET DRAWING SHALL ALWAYS CARRY THE SAME REVISION LEVEL

DOCUMENT CONTROL STAMP

MATERIAL: N/A

FINISH MACHINED SURFACES: N/A UNLESS OTHERWISE NOTED
DEBURR & BREAK ALL SHARP EDGES

DO NOT SCALE DRAWING

DIM. & TOL. PER ASME Y14.5 UNLESS OTHERWISE SPECIFIED
DIMENSIONS ARE IN INCHES
TOLERANCES ARE:
FRACTIONS ± N/A; DECIMAL X ± N/A, XX ± .02, XXX ± .005; ANGLES ± .50°

THIRD ANGLE PROJECTION

TRACKING NO. /wbs/6/zarecky/66000 /4300/66840e04376_02

APPROVALS / DATE
DRAWN: M. ZARECKY 7/2/05
CHECKED
APPROVED
APPROVED

Thomas Jefferson National Accelerator Facility
UNITED STATES DEPARTMENT OF ENERGY

HALL B
CLAS BEAM LINE ASSEMBLY
FROM TAGGER MAGNET THRU FWD CARRIAGE
BoNuS in CLAS RUN (FALL 2005)

SIZE E | DWG. NO. 66840-E-04376 | REV. –
SCALE 5/16 | USED ON NEXT NO. - | SHEET 2 OF 2

Me10