Hall C g0

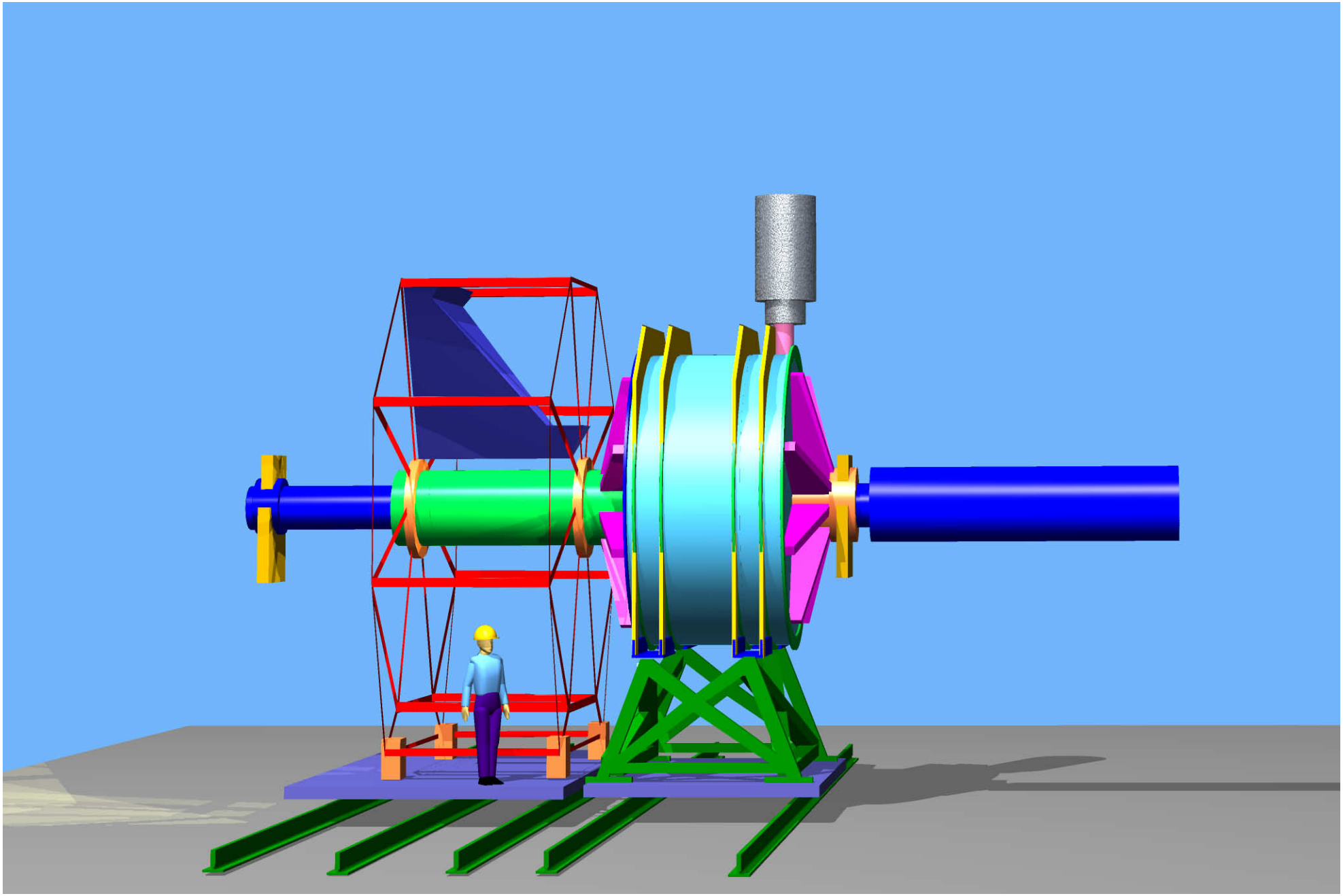

m-drive/martz//graphics/3dart/hallc/g0/g0elev.ai jm 8/15/00

Jefferson Lab