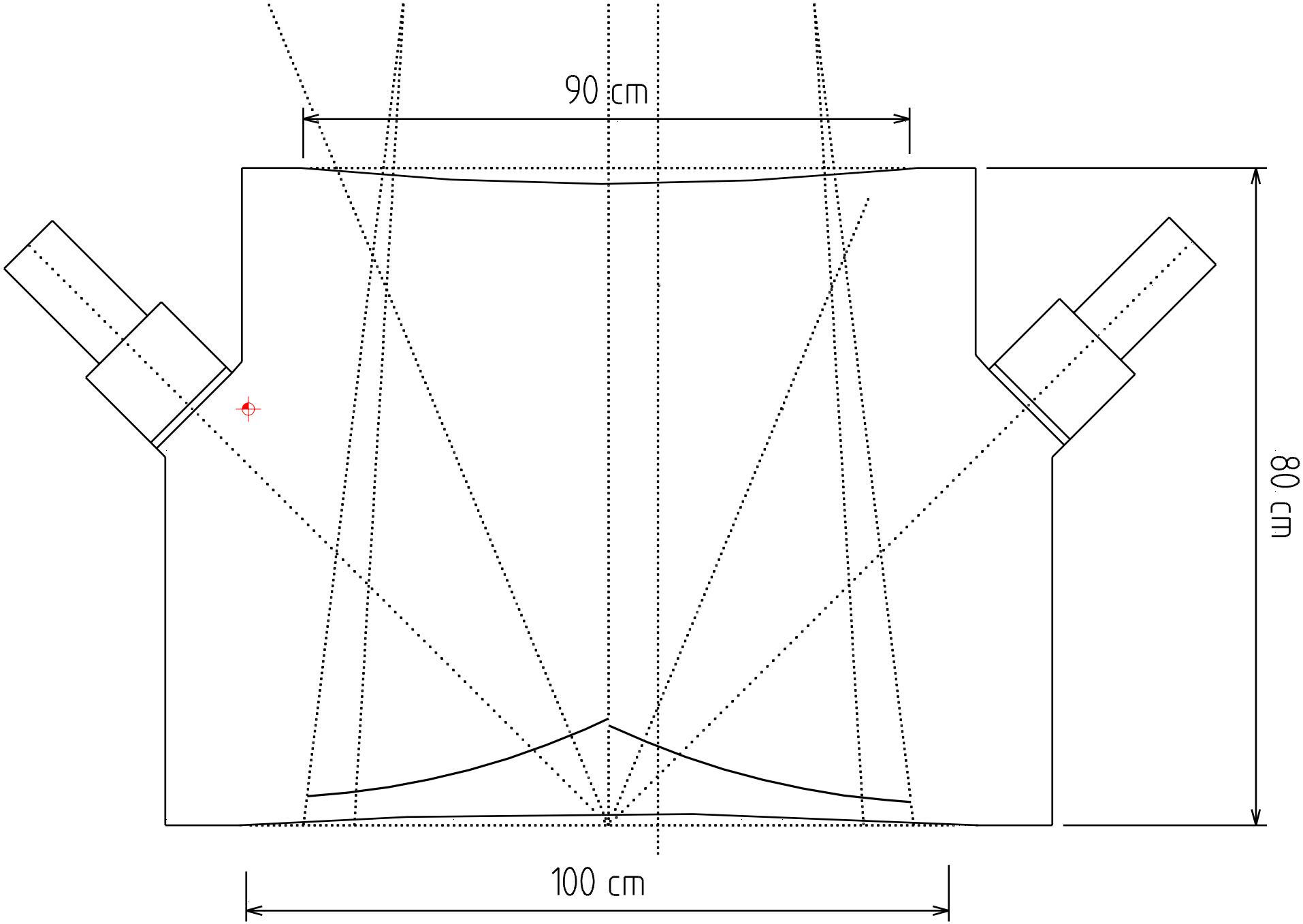
90 cm
80 cm
100 cm