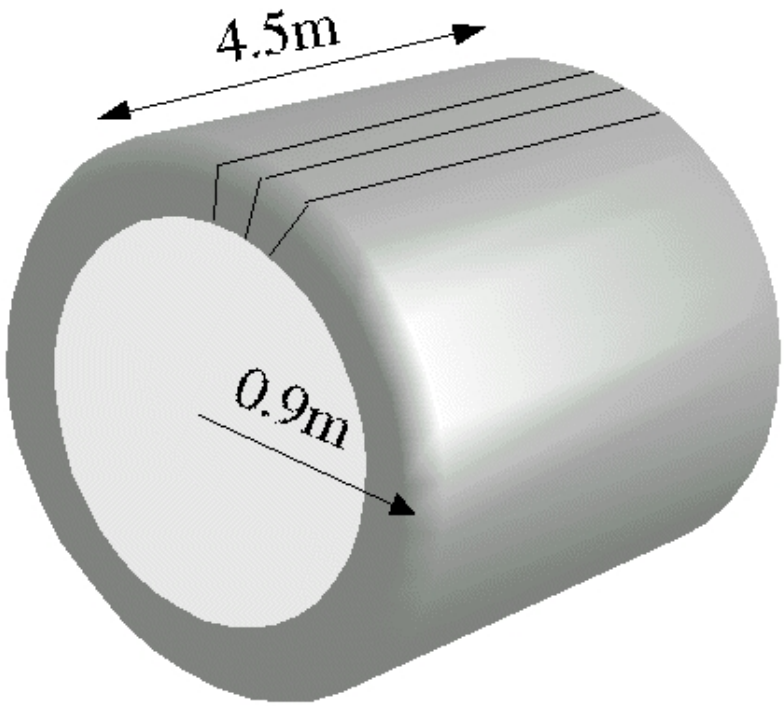
4.5m
0.9m

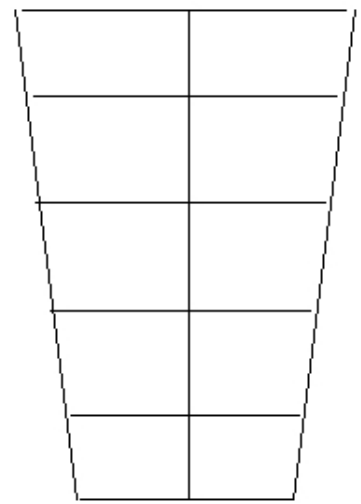

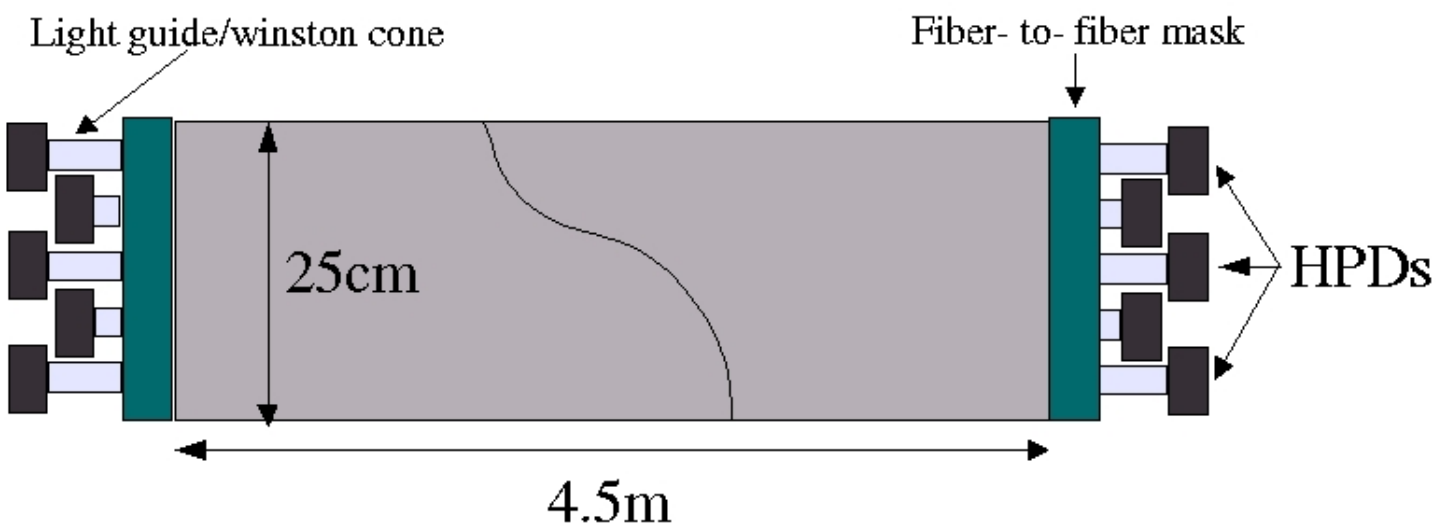
Light guide/winston cone
Fiber- to- fiber mask
25cm
HPDs
4.5m