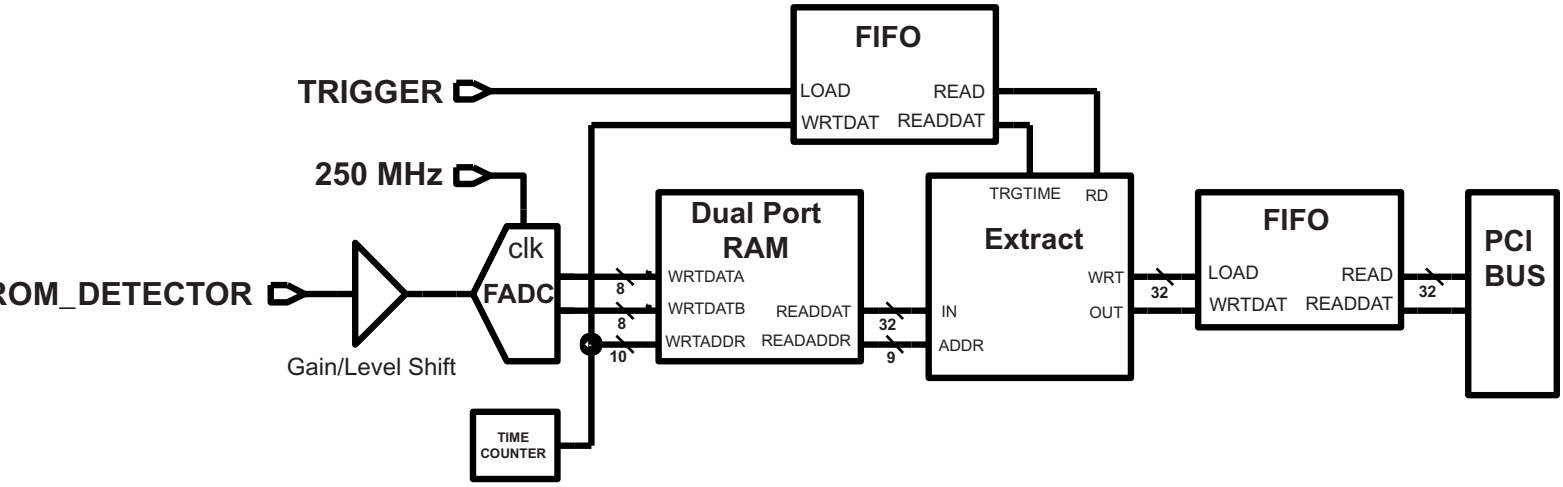
FIFO
LOAD
READ
WRTDAT
READDAT
TRIGGER
250 MHz
clk
FADC
ROM_DETECTOR
Gain/Level Shift
Dual Port
RAM
WRTDATA
WRTDATB
READDAT
WRTADDR
READADDR
8
8
10
32
9
TRGTIME
RD
Extract
WRT
IN
OUT
ADDR
32
FIFO
LOAD
READ
WRTDAT
READDAT
32
PCI
BUS
TIME
COUNTER