CEBAF-PR-95-060

PROCUREMENT AND COMMISSIONING OF THE CHL REFRIGERATOR AT CEBAF*

W. C. Chronis, D. M. Arenius, B. S. Bevins,
V. Ganni, D. H. Kashy, M. M. Keesee, T. R. Reid,
and J. D. Wilson

Continuous Electron Beam Accelerator Facility
12000 Jefferson Avenue
Newport News, VA 23606-1909 USA

ABSTRACT

The CEBAF Central Helium Liquefier (CHL) provides 2K refrigeration to the 338 superconducting niobium cavities in two 400 MeV linacs and one 45 MeV injector. The CHL consists of three first stage and three second stage compressors, a 4.5K cold box, a 2K cold box, liquid and gaseous helium storage, liquid nitrogen storage, and transfer lines. Figure 1 presents a block diagram of the CHL refrigerator. The system was designed to provide 4.8 kW of primary refrigeration at 2K, 12 kW of shield refrigeration at 45K for the linac cryomodules, and 10 g/s of liquid flow for the end stations. In April 1994, stable 2K operation of the previously uncommissioned cold compressors was achieved. The cold compressors are a cold vacuum pump with an inlet temperature of circa 3.0K. These compressors operate on magnetic bearings, and therefore eliminate the possibility of contamination due to any air leaks into the system. Operational data and commissioning experience as they relate to the warm gaseous helium compressors, turbines, instrumentation and control, and the cold compressors are presented.

INTRODUCTION

The cryogenic effort started with converting the 1986 CEBAF Conceptual Design Report into the detailed specification for the CHL. This was the highest priority due to the long lead time associated with the cold compressors and the need for a projected two-year operating period prior to full accelerator operation to allow a 98% availability to be achieved.

The process of awarding the contract took 11 months starting with the draft of the specification being sent to the vendors, with the awarding of the contract in January 1988. This was CEBAF's first major procurement and remains the second largest technical contract (SRF cavity production is the largest). Problems surfaced during the installation and commissioning. The 10 months scheduled for installation and commissioning turned into four and one-half years. Table 1 presents the Cryogenic Timeline.

* Supported by U.S. DOE contract DE-AC05-84ER40150

Table 1. Cryogenic Timeline

DATE		DATE	
2/86	CEBAF CDR	12/91	T4 turbine failure
2/87	CHL Specification to vendor		Start LN2 cooldown
1/88	CHL Contract awarded	1/92	Valve repair
10/89	Start installation	2/92	Valve repair
2/90	Cold Compressor #3 arc over in France	3/92	Various problems, valves controls, and T4 testing
7/90	Scheduled acceptance test		
10/90	Main compressors ready to operate	4/92	CC#4 position sensor failure
11/90	Rebuild oil coolers	6/92	Leak identified in 2K box
12/90	Main compressors ready to operate		T4 testing
	Start compressor test		CC testing
	Deliver first 2K system	7/92	Leak identified in 4K box
1/91	Main compressors ready to test		CHL start-up
2/91	Cooldown of 4K cold box		CC testing
	T4 turbine failure, radial bearing	8/92	CC testing, surges and rotor displacement
	Produce liquid, cool N LINAC		CC#4 field coil arc over
3/91	CHL auto transformer shorts, C4 and C5		T4 turbine operational
	Jumper all second stage auto-transformers	3/93	S LINAC supply and return TL cooldown
			Rebuilt CC on site
4/91	T4 turbine failure, thrust bearing	7/93	Unstable 2.9K operation
6/91	Cooldown of 2K box	9/93	CEBAF assumes CC commissioning
7/91	4K box looses vacuum with T4 on line		New control concept incorporated
	T4 has leaks inside 4K box		30 minute operation at 2.2K
	T4 testing	12/93	CHL contract closed
8/91	Start cooldown of 2K box	1/94	Additional 4.5K heat exchanger installed
	Testing 2K valves, leaks present		3750 W @ 2.1K realized
9/91	CEBAF changes valves on dewar, leaking	2/94	Last second stage compressor replaced
10/91	Start cooldown of N LINAC, 4K and 2K boxes		Cooldown first ESR magnet
		4/94	Stable 2.3K operation
	Extreme heat leak 2K box, iceball	5/94	Start final beam commissioning
	Problems with valves on 2K box		Stable 2.1K operation
	T4 testing, 18th to 31st	7/94	First beam on target
11/91	Trouble shut 2K box valves & controls	8/94	32 day continuous CC operation

4.5K SYSTEM

The 4.5K system was delivered approximately two months behind schedule; however, the commissioning had not been initiated by the scheduled 2K acceptance test date. In December 1990, the warm screw compressors were operational. The "normal" 168 hour performance test was attempted. The flowmeters were not installed with the proper L/D ratios, and the readings were not correct. Therefore, it was questionable at the time of the test what the capacity was of the warm compressor system Also, it was established prior to the test that the oil coolers were assembled incorrectly. CEBAF diagnosed the problem as leaking seals between the first and second passes of the oil coolers. Therefore, hot oil was leaking directly from the oil inlet of the exchanger to the outlet. This resulted in undesirable oil injection temperatures.

The next major problem was the cold turbine, T4. The bearings failed three times. This coupled with the "turn around" time of the required modifications resulted in schedule slippage. Both the T4 and T3 turbines experienced a high wheel inlet pressure during operation. At first contamination was suspected, however, when the turbine was warmed

and operated again, the wheel inlet tripped almost immediately. This is not the scenario associated with contamination. The problem was identified as a leaking seal. The specified seal and the installed seal were not the same. After the proper seal was incorporated, the problem was solved on both the turbines.

Other problems caused difficulty in the commissioning of the cold compressors:

- The contract required that the system could be operated at full capacity with two first stage and three second stage warm compressors. The proposal had the first stage loaded to 97% and the second stage loaded to 77%. At reduced capacity, only two second stage compressors were to be required. We were unable to operate the cold compressors with all six warm compressors loaded to 100% prior to a modification of the control parameters. In fact, the second stage compressors would not support the operation of the 4K system; only three of the four turbines could be operated. The solution was to install larger compressors. This required removing the Howden 321/132 machines and replacing them with 321/165 machines. This also required the oil injection pumps and motors to be larger. Since the oil piping change to accommodate the larger pump would be very difficult to incorporate due to operating schedule, the speed of each of the existing pumps was increased to 2250 from 1750 rpm. This was accomplished by installing a vari-drive on each of the second stage oil pumps. This of course reduces the MTBF of the pumps. The failure rate of the oil pumps definitely has been increased due to their increase in speed. The pumps on the second stage warm compressors operate at a higher temperature in the area of the bearings. The first stage oil pumps have not experienced a single failure. They have been operating upwards of 30,000 hours. The second stage pumps have each been overhauled at least once per machine. The bearings have been the failed part each time.
- The heat exchangers between the 30 and 4K level were sized for steady state operation only. During cold compressor pumpdown, the return side of the exchangers had such high pressure drop that the cold compressors were not able to remain operational. Replacement of the heat exchangers would require a three month shutdown, and this was not possible due to schedule slippage and accelerator commissioning. This "fix" might be completed in the future.
- The 4.5K heat exchanger has two additional problems. A) Two phase flow was attempted in a platefin exchanger; in this case it resulted in oscillations in the 4.5K system. B) The exchanger is undersized by approximately a factor of five in heat transfer. Therefore, CEBAF added a tube-in-shell boiler to correct the undersized heat capacity of the exchanger and the two phase flow problem. This was installed in the outlet U-tube of the 4.5K box leading to the 2K box.
- In an attempt to fix the previously discussed T4 turbine, the flow nozzles were reduced in size by about 8%. This results in an undersized unit, and the cold compressors will suffer when operated at full load during pumpdown. In order to "protect" the 4.5K box under this situation, a code for the throttling of the J-T valves has been developed. This prevents the turbines from overloading and warming up the cold box. A spare turbine of what is believed to be the correct size has been delivered. However, it has remained untested so far due to operational requirements of the accelerator.

2.0K SYSTEM

The 2K cold box consists of four stages of cold compressors and a two pass heat exchanger. The exchanger cools the GHe supply to 2.3K and the return flow at 2K increases to 3.2K at the inlet of the first stage cold compressor. Each of the cold compressor stages has its own variable speed drive and its own magnetic bearing set. The motors are LN_2 cooled, and the bearings have five degrees of freedom backed by mechanical bearings in case of power and battery back-up failure.

The 2K cold box suffered a series of failures. The cold compressor design was based upon the Tore Supra installation and scaled by a factor of three in size, and by a factor of ten in power. The Tore Supra installation had operated for circa 50,000 hours without a major failure, while the CEBAF cold compressor train had an MTBF of <<100 hours and an MTTR of >>1000 hours.

There were eight major electrical failures, and they were caused by two problems:

1) High voltage in the low pressure He (2 failures)
2) Differential contraction (6 failures)

The problem of voltage breakdown in He is well known to superconducting magnet fabricators but not to industry in general. The Tore Supra cold compressors were scaled by a factor of three in both voltage and current, which results in voltages of 380 V in the third and fourth stages. In 1989 the third stage arced over during component testing in France. Isolation transformers and spike filters were incorporated in the third and fourth stage compressors. This was the primary reason that the 2K cold box was delivered 14 months late.

The second problem was in the fine wire that was potted for the position and speed sensing coils. These coils were reported to be identical to the Tore Supra design, except for a slight increase in diameter. The wire would open circuit during cooldown and in at least one case corrected itself at warm-up. There were three failures of the position sensing coils which required an average of 1000 hours to repair. After the second failure all of the upper sensing coils were replaced with unpotted coils. Upon cooldown, a lower coil failed, resulting in the replacement of these also.

Two failures of the speed sensors did not halt the testing. The speed request was wired to supply the actual speed signal. These were rebuilt during the motor refabrication.

The last failure was experienced after the new motors were installed and cooled down. The upward axial thrust coil was a dual coil that was unknown to CEBAF. It incorporated another fine wire coil to provide the dc force to compensate for gravity. This coil had not been replaced and resulted in an intermittent ground fault. The electronics were modified to eliminate this coil and use the main coil to provide the dc biases as well.

The second arc occurred in 1992 at CEBAF in the fourth stage. The fourth stage had passed all electrical integrity tests after high voltage testing within a He environment. An inspection of the motor revealed it had been subjected to over compression of the motor windings during the coil forming process, the motor rotor had a crack in it, and there was damage to the upper backup radial bearings.

To allow for adequate space for coil forming the stator core needed to be shortened which resulted in a motor redesign for the third and fourth stage. During the redesign the motor voltage was also lowered to 170 volts as a secondary precaution. The redesign and refabrication took eight months.

By May 1993, serious testing of the cold compressors was initiated. However, the cold compressors reached 3.35K and were unstable. The next unstable run was in July and we reached 2.9K. CEBAF then decided to incorporate two major changes:

1) CEBAF assumed the responsibility for the commissioning of the cold compressors in order to accelerate the commissioning process.
2) A philosophic error was identified in the cold compressor control. This was corrected and a 30 minute run was completed at 2.2K on September 13, 1993. The contract was closed in December 1993.

Throughout the testing of the cold compressors the accelerator commissioning was being accomplished by the use of warm vacuum pumps. This system was composed of a 2000 cfm ring pump with a 10000 cfm blower. CEBAF started with one of these systems to commission the injector. As time progressed, another system was purchased for the north linac commissioning. However, as the operation of the accelerator approached, four additional bare ring pumps and blowers were purchased as a backup for the cold compressors that were not yet operational. CEBAF purchased the remainder of the required components, namely the heat exchangers, motors, and the oil pumps. CEBAF designed skids for the vacuum pumps and fabricated them at the tech shop. During this time the building was being erected for the additional vacuum pumping system. During the construction of the building to house this additional system the testing of the cold compressors continued in earnest.

The remainder of 1993 was devoted to the investigation of the problems in the 4K cold box. Meanwhile, the 4.5K portion of the system was operated in liquefier mode to support the accelerator. As the accelerator "turn-on" time approached, an intense effort was made to develop a reliable procedure for pumpdowns and stable operation of the 2K system. Cryogenics personnel operated the system for pumpdown development around the clock. A procedure was completed, and the system was able to operate at 2.3K by the start of operations as planned.

However, after about three weeks of operation, there was concern that since operations above lambda resulted in nucleations and this could result in cavity vibrations, causing problems with the RF control, beam was stopped for three days and we spent this time developing a procedure for operation at 2.1K. This task was successful and the machine has been operational at 2.08 to 2.1K.

Since July 1994, effort has been placed on improving the availability of the system, reliable restarts, regulation, and a fully automatic pumpdown controlled by the computer. We have, as will be discussed later in this paper, increased the availability to approach 98%, and the auto pumpdown code has been in operation. Details are in reference 3. Regulation has been improved with a code called auto heaters. This code maintains a constant total heat for the cold compressors. When the RF load is increased, the ohmic heating in all the cryomodules is decreased; therefore a total load is maintained. The cold compressors are operated at 85% of the 236 g/s design flow. The compressors have been operated as low as 180 g/s; however, during a perturbation such as an RF shutoff, the flow fluctuates and a trip can occur. Therefore, operation at 200 g/s has been incorporated. Further testing is scheduled to investigate the possible operation at 180 g/s.

The initial pumpdowns of the linacs, after being at 4.5K for long periods of time, have required about eight hours to complete. The normal pumpdowns experienced, where a restart is possible within three to four hours, require about 2.5 hours. The pumpdown procedure has been modified several times and the latest procedure is to delay adding heat until a pressure of 40 mb has been reached. Additional information on the pumpdown is presented in reference 4. A typical pumpdown curve is presented in Figure 2.

SYSTEM RELIABILITY

The 35,000 hours of operation have resulted in typical reliability problems encountered with the commissioning of a new system. Loss of the utilities is one of the most catastrophic events. This, of course, results in the entire system being shut down. The CEBAF CHL has a high reliability power feed. Over the past years power outages have been minimal. When a planned power outage is occurring, a pumpdown of every system except the linac's is completed with the linac's isolated. This allows the system to be down for up to four hours without the loss of helium.

The CHL water system also has an outage on the average of once per year. The cooling towers are open and after a period of time soil and other foreign material collects in

the water sump. This results in clogging of certain heat exchangers and cooling water filters.

The system that has not resulted in down time directly is the computer power supply system. This supply has an UPS backup, two power feeds from the site grid, and an auto starting engine generator capable of 20 hours of operation from the propane supply tank.

The 4.5K system has been quite reliable. Problems were experienced with the turbine seals during the first operational period. However, after this was corrected the cold box operated well. The main problem is the warm compressors. Due to the undersizing of the machines by the contractor, the required redundancy of the second stage is not available. Three second stage compressors must be operated presently to maintain the cold compressors. Work is in progress to improve this situation. CEBAF is in the process of planning for the installation of additional second stage compressors. With 30,000 hours on all six machines, time is starting to run short. At 10,000 hours, there were two premature failures that were a result of improper alignment of the motors to the compressors and improper coupling installation. These potential problems were pointed out to the subcontractor at the time but went unheeded.

The system has also experienced the normal valve failures, electrical faults, and startup contamination problems.

AVAILABILITY

The cryosystem availability as defined at CEBAF, is the amount of time the accelerator is at 2K and proper operating liquid level is present in the cryomodules. This is whether beam is being produced or if other testing is in progress.

Cryogenic availability for the previous year has averaged 96.9% and 98.0% for the last six months; the downtime and its causes are shown in figure 3. The causes are split between the 4K system (1.4%), and the 2K system (0.6%), and the cryogenic controls (1.2%). The cryogenic controls category includes cryogenic software and hardware, as well as linac cryogenic instrumentation for the cavities. Not included in the downtime is another 0.8% of nonavailability charged to other sub-systems such as utilities; these included site power, city water, end station errors, and MCC problems.

During this period there were 44 unscheduled cold compressor trips plus three additional downtimes which did not trip the cold compressors. The cold compressors have a 186 hour MTBF and a 5.9 hour MTTR. The longest cold compressor run was 766 hours, while the shortest was 5 hours. About half of the 5.9 hour MTTR was in the response and repair time, while the other half was the accelerator pumpdown time.

The primary 4K system downtime was caused by contamination tripping the 25K and 15K turbines; the turbine trip in turn causes a temperature transient, which would trip the cold compressors. Other causes included the warm screw compressor trips and some control valves.

Only one of the 2K system downtimes was associated with the cold compressor hardware; with a valiant 14 hour all-night effort, it was possible to get the magnetic bearing electronics operational again. Six downtimes were due to excursions of the cold compressors out of their stable operating regions, and were not traceable to any equipment failures.

The unreasonably large cryo control downtime was due to three root causes: A) a failure of a supervisory LAN connection and/or board, B) intermittent failures of the linac serial highways which transmit load liquid level information, and C) overloading of memory allocations due to adding the third refrigeration system, ESR, to the network. The first was fixed by replacing several boards and reworking all the terminations, the second problem still remains, and the third has been partially fixed.

The effort on cold compressor restarting procedures had major effects on the availability. In June 1994 a very good cold compressor restart took 5 hours, while bad ones

took three to four times longer. During the fall, procedures improved and increased the probability of successfully pumping down. During the last six months, the average downtime was 4.6 hours, with the pumpdown time being 2.5 hours for cold compressor trips lasting 3 hours or less. During the last four months, this has been fully automated, including the jumping of turbines through their critical speed range.

REMAINING TASKS

The primary need is to be able to shut down one of the warm compressors for maintenance. Presently, one of the first stage compressors can be shut down for repairs; however, the three second stage compressors all must be operational or the cold compressors will not operate. If additional second stage compressors can be added, then the system availability will be greatly improved. We cannot operate the cold compressors for more than two hours without all three second stage machines.

The primary weakness of the cold compressor system is the repair time. Even with 50,000 hours compressor and 40,000 hours controller MTBF's, we cannot achieve the required 98% availability. To achieve this, we need one week maximum repair time for the compressors, and eight hours on the controllers. We found that not all of the printed circuit boards were calibrated correctly, and the supplier was required to spend a week at CEBAF to determine the proper values and set up the boards. Also, some of the boards were not fabricated correctly, and several were required to be returned to the factory to be reworked.

CEBAF is in the process of securing a complete set of redundant cold compressors and controllers. During the following year these will be incorporated in a redundant cold box system.

The remaining major problem is the 30K to 4K heat exchangers. The present exchangers are costing efficiency and cold compressor restart delays. Since there is not a planned three month shutdown for the next few years, work-arounds will be continued. We are planning to order the exchangers to have them on hand; in the event of a shutdown they can be installed.

LESSONS LEARNED

This contract contained one high tech element, the cold compressors. CEBAF originally was planning to make two separate contracts; however, all the potential suppliers wanted the two procurements combined. CEBAF's agreement to combine the two contracts appears to have been a mistake. The contract required that the system be designed with separate 4K and 2K cold boxes, which would have permitted the commissioning of the 4K box prior to the 2K box. This would have saved time and also cost to CEBAF due to the replacement of the warm compressors.

Two independent contracts, each with its own acceptance requirements, would have saved a minimum of two years of the nine year effort. The gains would have been primarily from the 4K system:

1) The 4K contract would have specified the interface parameters eliminating at least some of the design errors.
2) The 4K acceptance test would have identified the problems in 1991 and forced the vendor to correct these prior to the delivery of the 2K box.
3) The commissioning would have been independent and would have eliminated the delays of the 4K box due to problems with the 2K box.

The second mistake was not to have an inspector/engineer at the site of the vendor. This would have allowed the problems to be more readily visible.

ACKNOWLEDGMENTS

This paper represents the work of the entire cryogenic group presently at CEBAF and all the term and contract persons no longer employed which were involved in the construction of the CHL system and the transfer lines. Thanks to the personnel at L'Air Liquide for the design and fabrication of the rotating machinery. Also, thanks to James Howden of America for the timely delivery of the larger second stage compressors.

REFERENCES

1. W. C. Chronis, D. Arenius, D. Kashy, M. Keesee, and C. H. Rode, "The CEBAF Cryogenic System," *Proceedings of the 1989 IEEE Particle Accelerator Conference*, pp. 592-594, March 1989.
2. CEBAF *Design Handbook*, ch 11.
3. C. H. Rode, "CEBAF Cryogenic System," to be published in the proceedings of the 1995 Particle Accelerator Conference.
4. B. S. Bevins, W. C. Chronis, and M. M. Keesee, "Automatic Pumpdown of the 2K Cold Compressors for the CEBAF Central Helium Liquefier," to be published in the proceedings of the July 1995 Cryogenic Engineering Conference.

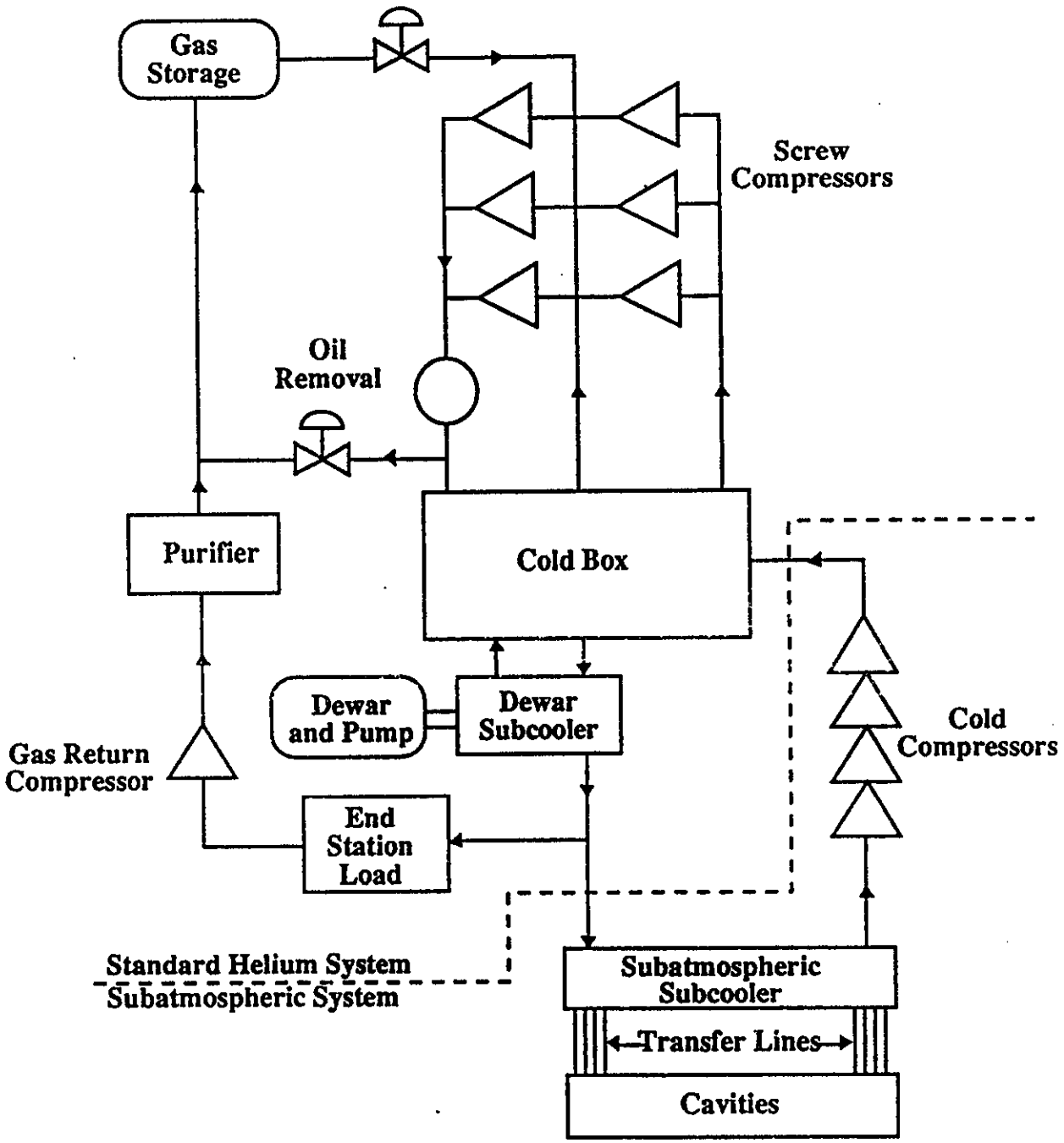

Figure 1. Block diagram of refrigerator

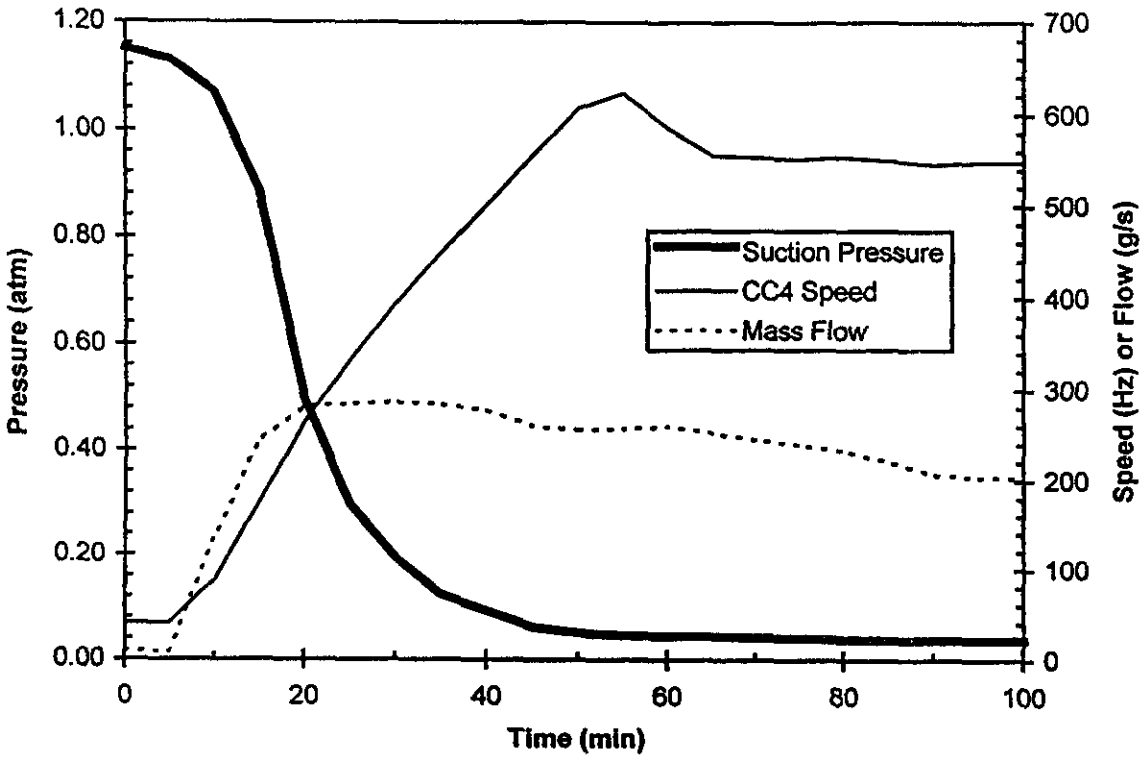

Figure 2. Repair and pumpdown cycle.

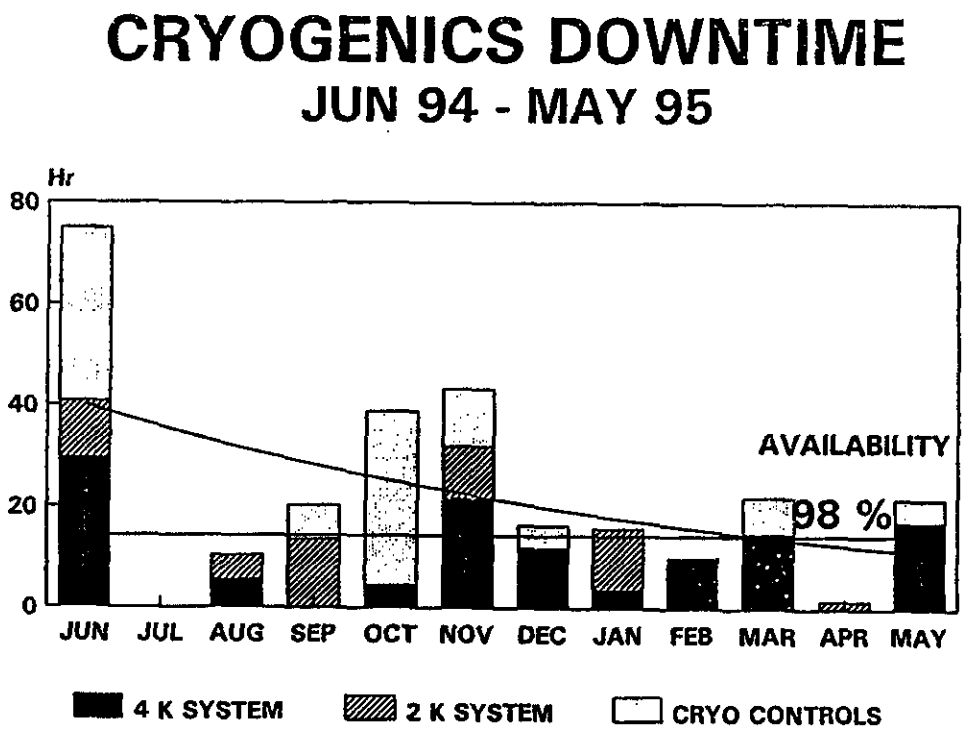

Figure 3. Cryogenic downtime (June 1994 - May 1995)