CEBAF-PR-95-024

MEASURING AND ADJUSTING THE PATH LENGTH AT CEBAF*

G. A. Krafft, M. Crofford, D. R. Douglas, S. L. Harwood, R. Kazimi, R. Legg, W. Oren, K. Tremblay, and D. Wang, Continuous Electron Beam Accelerator Facility, 12000 Jefferson Avenue, Newport News, VA 23606 USA

Accurately setting the path length around the machine is central to the proper operation of the CEBAF accelerator. The CEBAF main accelerator consists of two recirculating superconducting linacs operating at 1497 MHz fundamental frequency. The electron beam can recirculate up to five times through the two linacs before it is extracted to the experimental halls. In order to obtain maximum energy gain and minimum energy spread through the linacs, all passes should arrive at the beginning of the linacs in phase at the crest of the RF cycle. In this paper we explain how the arrival times of higher pass beams are measured with respect to the first pass to less than one degree of RF phase and how the path length around the machine is adjusted.

Following a brief introduction to the CEBAF design and some local nomenclature, these topics will be discussed: differential RF phase measurement of time delay, the energy method of cresting the higher pass beams, results obtained with the measurement techniques, future plans and improvements to the devices, and finally, a set of conclusions.

I. INTRODUCTION

The CEBAF accelerator consists of a 45 MeV injector, two side-by-side 400 MeV superconducting linacs, 9 recirculation arcs that shuttle the beam through the linacs up to 5 times for 4 GeV total energy, and three experimental halls. In this paper the arcs will be labelled, Arc1-9, in the order that the beam passes through the arcs to the highest energy.

In the so-called extraction region of each of the arcs, three "dogleg" bend magnets are installed. By adjusting the excitation of this dogleg chicane, the path length of that arc is adjusted. If the path length of a given arc is adjusted, it is clear that the time of arrival of the microbunches through any higher pass through the linacs is phase shifted.

At CEBAF two types of measurements are used to set the proper recirculation path lengths. The first method, which will be called the energy maximization method, uses the fact that by finding the maximum energy gain through each pass of the linacs one assures that the time of arrival of all the passes is the same, modulo the RF wavelength of 20 cm. This method suffers from the fact that measurements must proceed sequentially, from the lower energy passes to the higher energy passes, to assure that all passes through the linac are properly crested.

A more global method of measuring the phase is to measure the time of arrival of the microbunches on the separate passes using fast RF diagnostics. This method is potentially much quicker than the former, because errors can be localized to individual arcs in a single measurement, and because the individual measurements occur in a single step, in contrast to the first method, where it takes at least three steps to establish a single cresting phase.

Both methods have been pursued at CEBAF with the following results. First setup of an arc is usually most easily accomplished with the time of arrival method. Within two or three measurement and adjustment cycles, the path length of the arc is set within a few degrees of the energy cresting phase. After being adjusted, the beam will fairly easily pass on through the next arc, at which time, it becomes possible to complete the energy maximization measurement easily. Usually, the machine is left in a configuration that maximizes the energy of a pass. As will be seen later, comparing with measurements using the time of arrival method yields discrepancies of order one degree. The time of arrival method has much higher precision than the cresting method. The remainder of the paper will describe in more detail why.

II. MEASUREMENT DEVICES

The path lengths of the arcs are determined using precision phase detectors to obtain relative time information about the electron beam bunches. As is seen in Fig. 1, the phase of a beam derived signal, obtained from a longitudinally polarized pickup cavity tuned to 1497 MHz, is compared with an RF signal derived from the master phase reference system through a mixer. The measurement proceeds by first establishing a 3.8 μsec beam pulse. Because the total recirculation time is 4.2 μsec, each of the passes separately excites the cavity. The variable phase shifter is used to calibrate the measurement by adjusting the phase shifter so that the first pass beam output is maximized and by recording the resulting voltage maximum.

The time of arrival measurement is done by adjusting the phase shifter so that the first pass output is zero; any output from the higher pass beams is attributable to relative time phase shifts between the individual passes. The electronic noise of the measurement allows a precision about 0.15°, or about 83 μm. When the measurement is complete, the path length may be changed using the dogleg chicane.

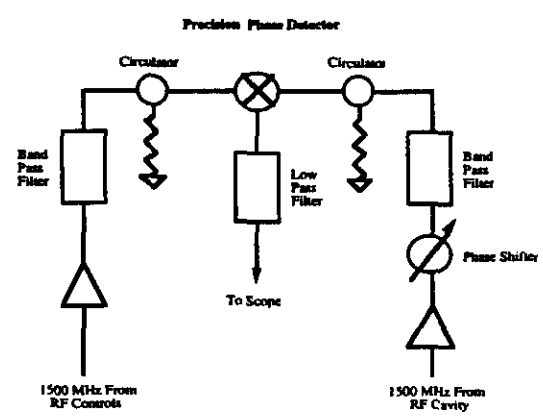

Fig.1 Precision Phase Detector

* Supported by U.S. DOE contract DE-AC05-84ER40150.

III. RESULTS

During the most recent commissioning run at CEBAF, the path length of a given arc was usually set by the energy maximization method, i.e. the dogleg magnets controlling the path length of an arc are adjusted so that the beam energy out the linac is maximized. Very precise relative energy information is obtained, at 10^{-4} energy resolution, using the succeeding arc as an energy monitor. For example, Arc 5 is used as an energy monitor when the dogleg of Arc 4 is set.

Even in the most optimistic case of the second pass through the north linac, with a relative energy resolution of $\delta E/E \approx 10^{-4}$ one obtains a phase set precision of about one degree using a measurement procedure based on dithering the arrival phase around the crest value. The relative precision degrades in proportion to the number of linac segments passed through.

Toward the end of our most recent running period, data like that appearing in Figs. 2 through 5 were collected, under conditions where the path length of Arcs 1 through 6 were adjusted by the energy maximization method. Figures 2 and 3 are oscilloscope traces using the north linac phase detector and Figures 4 and 5 were, within minutes, similar traces from the south linac phase detector. The beam conditions were a pulse length of 3.8 μsec and a beam current within the pulse of about 12 μA.

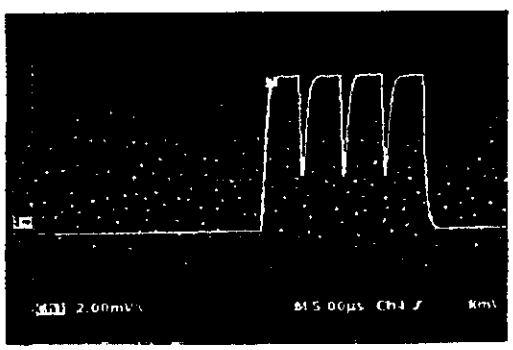

Fig.2 Phase Detector output in North Linac, Crest phase

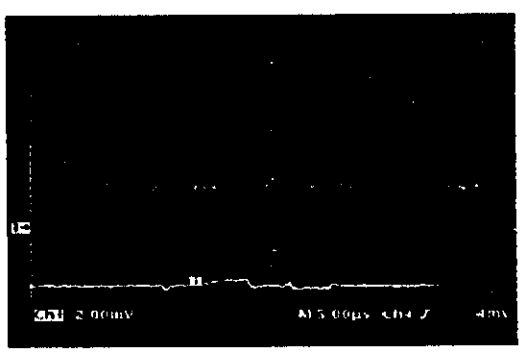

Fig. 3 Phase Detector output in North Linac, Zero crossing phase

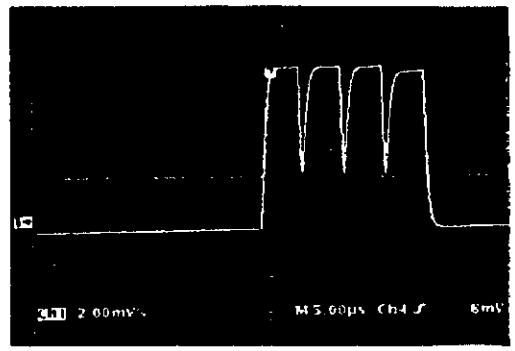

Fig. 4 Phase Detector output in South Linac, Crest phase

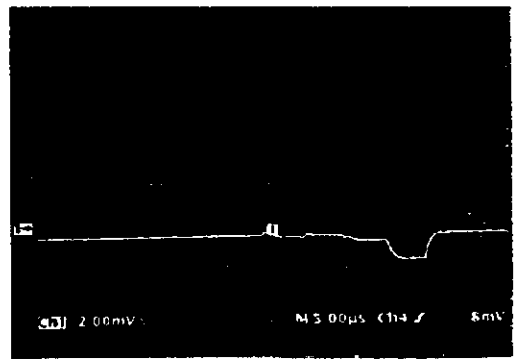

Fig. 5 Phase Detector output in South Linac, Zero crossing phase

Several comments are obvious from Figures 2 and 4, where the phase shifter is adjusted so that the phase detector output from the first pass beam is maximized. First, the rise time of the pulse, limited by the rise time of the detector cavity, is approximately 200 nsec. This allows data taking in the flat part of the curve of duration about 3 μsec. Second, it is clear that each separate pass of the beam is distinguished in the output of the phase detector. Third, knowing that the beam phase is within a few degrees of crest for all four passes of the north linac, one concludes that there is above 98% transmission of the beam through four passes of the north linac because the output voltages are the same within 2%. In Fig. 4, the fact that south linac pass four appears lower in voltage means that either there is beam loss in Arc 7, or the path length of Arc 7 produces a phase shift, visible in Fig. 5 and discussed below. Finally, by recording the maximum output from the first pass beam, V_1, one has calibrated the phase detector.

Figures 3 and 5 result when the phase shifter of the phase detector is adjusted so that the first pass beam is at the zero crossing (i. e., at zero output voltage). Now the output voltages from the phase detector give the phase shifts of the higher pass beams relative to the first by

$$\Delta\phi = \sin^{-1}(V_i/V_1) \approx V_i/V_1,\ i = 2, 3, 4, 5$$

where V_1 is the calibration output voltage. The shown data yield the phase shifts of Table 1. In Fig. 4, most of the decrease in the phase detector output in pass 4 is due to the fact that the path length of Arc 7 is off by 9.5°, not because of transmission loss.

Table 1 :Relative Phase Shifts for Four Passes

North Linac	
$\Delta\phi_{12}$	0.7°
$\Delta\phi_{13}$	-1.1°
$\Delta\phi_{14}$	-1.7°
South Linac	
$\Delta\phi_{12}$	1.0°
$\Delta\phi_{13}$	-2.0°
$\Delta\phi_{14}$	-9.5°

Typically, when such a large phase shift is observed, new settings for the dogleg are computed and loaded into the machine. Usually, the adjustment yields the correct phase shift within a degree or two, allowing a precise arc spectrometer measurement to be completed.

Care must be taken that the amplifiers before the mixer are not in saturation, as otherwise the phase shifters are not necessarily calibrated properly. This possibility is overcome in the phase detector assembly by employing a variable attenuator before the mixer.

IV. FUTURE PLANS

There are several enhancements that will be pursued in the near term. They are related to computer control and analysis of measurements, coupled with automatic update of the dogleg magnets. An externally triggered 10 MHz A/D card is being purchased to digitize the phase detector outputs. The card will acquire data for 50 microseconds after the arrival of the first pass beam at each detector cavity. During the interval between beam pulses, the data (about 500 numbers) will be dumped into a control system IOC, where five sets of data in the flat region of the phase detector output (about 3 microsecond or thirty numbers), will be selected for averaging to reduce the noise in the measurement. Signal levels from each of the five passes will then be used to compute the time of arrival of the higher pass beams relative to the first pass beam.

Once the relative arrival times of the different passes have been determined, it is simple to compute an update for the path length doglegs, including the sign. Each of the arcs may be updated in parallel, in contrast to the situation when the arc is used as a spectrometer, where sequential cresting of the energy must proceed from the lower energy arcs to the higher energy ones. Consequently, operational time for path length adjustment is decreased substantially. For the precision work that CEBAF will reach in the future, it will be necessary to understand the reasons for the degree level discrepancies between the two methods. When the causes are understood, the measurement noise should allow cresting of the higher pass beams to 0.05 degrees of RF phase. This is twenty-five microns in path length or 100 femtoseconds in time. In the far future, regulating the path length in a feedback arrangement is possible.

Calibration of the measurement will proceed in the same way as that it occurs for the CEBAF bunch length measuring system [1,2]. The phase shifter will be automatically varied until a maximum value is obtained for the first pass beam signal using a non-linear optimization routine. After recording the maximum voltage, the phase shifter will then be adjusted to the zero crossing of the phase detector where calibrated phase measurements may proceed. The calibration process takes under one minute.

V. CONCLUSIONS

A path length measurement and adjustment scheme has been installed and commissioned at CEBAF. The system is based on measuring the time of arrival of the individual microbunches by measuring the phase of a beam generated field in an RF cavity tuned to a longitudinal mode, and on changing the path length of the individual arcs with dogleg magnets. Experimentally, when the beam energy is crested out of each arc individually, the beam phase as measured by the phase detector is found be the same as the first pass beam phase within a degree at 1497 MHz. The one degree discrepancies between the arrival time measurement method and the energy cresting measurements are not fully understood. However, the noise floor of the time of arrival method is considerably better than the energy cresting method, especially for the higher passes.

Already, the time of arrival method of setting the beam phase is preferred when large phase shifts are to be corrected, both because it is possible to locate the arc in error quickly, and because the arc acceptance usually limits the energy cresting method when large errors are to be corrected. When both methods of setting the path length are a bit better understood, it is anticipated that the time of arrival method of beam phase determination will become standard, as its noise characteristics are better, and because the measurement takes much less time than cresting the arcs individually. Also, this monitor has been extremely useful in providing a quick indicator of beam loss, when the phase detector is set to maximize output.

VI. REFERENCES

[1] G. A. Krafft, "CEBAF Status", *Proc. of the 1994 Linac Conference*, pgs. 3-7

[2] C. G. Yao, "A New Scheme for Measuring the Length of Very Short Bunches at CEBAF", *Proc. of the 1990 Beam Instrumentation Workshop*, AIP Conference Proceedings No. 229, pgs. 254-259

[3] Y. Chao, *et al.*, "Commissioning and Operation Experience with the CEBAF Recirculation Arc Beam Transport System", *Proc. of the 1993 Particle Accelerator Conference*, pgs. 587-589