CEBAF-PR-95-004

COMMISSIONING AND OPERATION OF THE CEBAF END STATION REFRIGERATION SYSTEM

D. Arenius, B. Bevins, W.C. Chronis, V. Ganni
D. Kashy, M. Keesee, J. Wilson Jr.

Cryogenic Systems Group
Continuous Electron Beam Accelerator Facility
Newport News, Virginia, 23606, USA

ABSTRACT

The CEBAF End Station Helium Refrigerator (ESR) System [1] provides refrigeration at 80 K, 20 K and 4.5 K to three End Station experimental halls. The facility consists of a two stage helium screw compressor system, 4.5 K refrigerator, cryogen distribution valve box, and transfer lines to the individual experimental halls. The 4.5 K cold box and compressors were originally part of the ESCAR 1500 W, 4 K refrigeration system at Lawrence Berkeley Laboratory which was first commissioned in 1977. The compressors, 4.5 K cold box, and control system design were modified to adapt the plant for the requirements of the CEBAF experimental halls. Additional subsystems of cryogen distribution, transfer lines [2], warm gas management, and computer control interface were added. This paper describes the major plant subsystems, modifications, operational experiences and performance.

INTRODUCTION

The End Station Refrigerator is one of three CEBAF cryogenic facilities. These facilities are the Central Helium Liquefier (CHL), located in the center of the accelerator; the End Station Refrigerator (ESR), located next to the End Stations Halls A, B and C; and Cryogenic Test Facility Liquefier (CTF) which is located adjacent to the Cryomodule Test Laboratory. While the purpose of the CHL and CTF is to provide cryogens to superconducting cavities in the accelerator ring and testing areas, the ESR is designed to provide cryogens to the CEBAF experimental halls. These halls have superconducting magnets, cryogenic targets and various equipment which require refrigeration at 4.5 K, 20 K, and 80 K. The ESR can provide refrigeration to one or all three halls with at any given time.

Table 1. End Station Cryogenic Heat Load Budget [3]

	Device	Lead Flow	4 K	20 K	80K
Hall A					
	Magnet	64 L/HR	130 W		UNK*
	Transfer Line	-NA-	76 W		50 W
	Cryotarget	-NA-		250 W	
Hall B					
	Torus Magnet	40 L/HR	220 W		UNK*
	Transfer Line	-NA-	20 W		30 W
	Cryotarget	-NA-	0 W		0 W
Hall C					
	Magnets	60 L/HR	135 W		400 W
	Transfer Line	-NA-	46 W		50 W
	Cryotarget	-NA-		250 W	

* Unknown -NA- not appliable

ESR Cryogenic Heat Loads. The three Experimental End Stations (Halls) contain superconducting quadrupole magnets, a large six coil toroid, and miscellaneous user's equipment. The CEBAF End Station cryogenic refrigeration load allowance[3] for the experimental halls is presented in Table 1. These requirements include refrigeration at 4.5 K, 20 K, and 80 K. The 80 K refrigeration is provided by LN_2 from the CHL. The CHL LN_2 storage capacity is 75,700 L. The CHL facility also provides gaseous helium storage and purification for the facility. The ESR facility can accept 10 G/S at 4.5 K and 2.8 bar from the CHL as a secondary helium cryogen source for the End Stations.

Refrigerator History. The refrigerator (cold box) was originally designed for Lawrence Berkeley Laboratory (LBL) in 1977 for two principle modes of operations. As a liquefier, it provided 11.7 G/S at 4.42 K. In the refrigerator mode, it was designed to provide 1450 watts of refrigeration and 3 G/S of liquid at 4.42 K. The refrigerator was one of two identical refrigerators which were built at approximately the same time for separate laboratories. At the second laboratory the refrigerator had a performance design mode requirement which could provide 950 watts of refrigeration plus 1.7 G/S of liquid at 4.42 K and 1250 W at 21.5 K. The second plant, at FERMI, is still in operation today. In June of 1990 the refrigerator system was shipped to CEBAF from LBL. The shipment included the compressor skids, motor starters, a local analog control console, 10,000 L helium dewar, and the refrigerator. The plant was placed into storage until the building for the plant could be finished. An outline of the plant's history is presented in Table 2.

Table 2. ESR System Timeline

SYSTEM	DATE	REMARKS
LBL		
Compressors Received	Aug-76	
Coldbox Recieved	Jun-77	
Acceptance Test	Nov-77	
Last Used At LBL	Sept-8	~960 hours
CEBAF		
LBL System Received	Jun-90	
Installation Start	Feb-92	
Compressor Startup	July-94	~3300 hours to date
Cold Box Startup	Dec-94	~2000 hours to date
CEBAF Modifications		
Gas Management, Utilities	Feb-92	New To System
Refrigerator Controls	Feb-92	PLC and Computer
Compressor Controls/Tubing	Jun-92	PLC/Welded Lines
Cold Box LN_2 Boiler Installation	Jun-94	New To System
External 80 K Purifier Beds	Feb-95	New To System
Cold Box 4.5 K Separater/Subcooler	Jun-95	New To System
Dewar Internal Subcooler	Jul-95	New To System
Compressor Oil Coolers	Jul-95	Replacement
Spare Compressor	Aug-95	New to System

The number of operating hours at LBL were less than 1000 hours and the refrigerator had been inactive from 1981 until 1994. The technical concerns were therefore centered on the condition and refurbishing of the major equipment. This included the compressor motors, motor starters, compressors, control system and the turbine expanders. Consideration was given to the anticipated maintainablity and the experiences of the LBL operations. Many of the component manufacturers, including the turbine expanders and compressors, were still providing spare parts. Original LBL spare parts were transfered to CEBAF with the refrigerator and compressors. Other spares, such as turbine cartridges,were purchased later by CEBAF. Much of the initial operational maintenance insight for the plant came from the LBL logbooks, documentation and operator's manual. New subsystems were also needed for the CEBAF facility. This included a cooling water system, electrical distribution, cryogen distribution valve box, transfer lines[2], compressor oil removal, gas management, instrument air, gas contamination monitoring, and computer interface cabinets. Design, fabrication, and installation of the system modifications and new subsystems were performed by CEBAF personnel.

CEBAF PROCESS DESCRIPTION

Overall Design

The CEBAF End Station Refrigerator System is presented in Figure 1 for the CEBAF full 4.5 K refrigeration design capacity mode. Two stages of compressors compress helium from 1 bar to 17 bar with a discharge flow rate of 214 G/S. During cooldown, system makeup gas is brought into the compressor system interstage or first stage suction at 2.5 bar or 1 bar respectively. A 2nd stage discharge massout control valve provides the means to remove excess gas from the system during a warmup process. Compressor bypass valves are provided around each stage to regulate the compressor suction pressures. Flow from the refrigerator returns 113 G/S to the interstage and 101 G/S to the first stage compressor suction. The compressor discharge flow enters the refrigerator where 5 G/S is diverted to a GN_2 vent warmup heat exchanger. The diverted flow is then recombined with the main high pressure flow. The flow stream is then precooled in a LN_2 pool boiling heat exchanger to 80 K, passing through one of two new 80 K adsorber beds. As the discharge flow continues through the refrigerator 113 G/S is diverted through the upper turbine at an inlet temperature of 18.5 K. The turbine flow exhausts at 2.5 bar and 12 K and is returned to the interstage of the compressor system.

The remaining 101 G/S flow is expanded through a parallel combination of the lower turbine (75 G/S) and a bypass valve (26 G/S) to 2.9 bar and 5.7 K. The process flow is then subcooled to 4.5 K by utilizing 10 g/s of the process stream in a new subcooler/phase separator which is internal to the refrigerator. Additional subcooling capacity is provided by a 10,000 L liquid helium dewar which was modified with internal cooling coils.

A refrigerator process connection is provided for supplying 15 K He to future hall cryogenic target loads at reduced 4.5 K refrigeration loads. The target load flow returns via a 20 K refrigeration process return connection to the refrigerator interstage at 2.5 bar.

Compressor System

The compressor system is comprised of two stages of oil flooded screw compressors. Each stage has a single electrically driven compressor and was a part of the original LBL facility. The first stage is a 3600 rpm, 150 KW Sullair C-25-LB compressor. The second stage is a 3600 rpm, 750 KW Sullair C-25-LA compressor. Each compressor is mounted on an individual skid with an oil cooler, bulk oil separator, 480 volt drive motor, local control panel and a gaseous helium aftercooler. The original compressor skid mounted relay logic control panels, instrumentation, instrument tubing, and oil injection lines were replaced. This was to eliminate threaded and compression fittings as possible sources of system contamination. A small programmable control system was installed on each compressor skid and integated with the CEBAF computer control system for unattended operation. The remodeled compressor controls have worked very well with the exception of an initial loose control fuse holder which resulted in a few sparatic compressor trips.

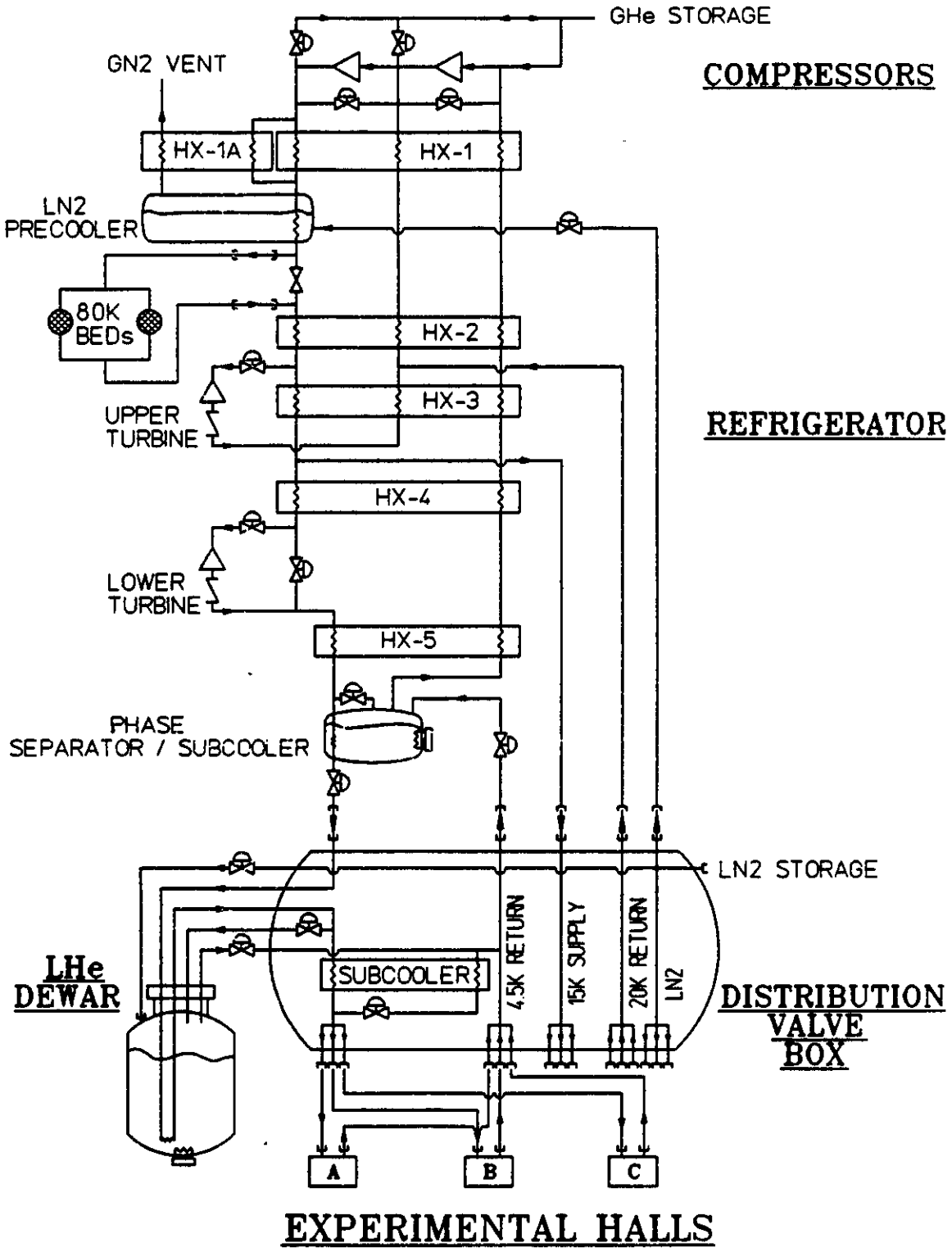

FIGURE 1. ESR Facility Simplified Flow Diagram indicating the major subsystems of compressors, refrigerator, liquid helium dewar and distribution valve box.

The first stage compressor and the oil coolers of both stages were disassembled and inspected for possible corrosion which may have occurred during the system inactivity and storage period. There was very little corrosion evident. Compressor oil seals, oil, and motor bearings were routinely replaced. Initial static motor winding testing indicated no adnormalities. After approximately 1000 hours of compressor operation, however, both the first and second stage motors required rewinding or replacement because of the development of electrical winding failures. The second stage compressor motor has been increased from a 600 KW to a 750 KW drive to allow for a larger operational load margin. The compressor gas management system is a new design. The system utilizes relatively small equal percentage gas makeup valves (<25 G/S). This provides a finer degree of control during normal cooldown or steady state refrigeration operations. The compressor bypass valves were sized for the compressor startup and system pressure building phase of operation. During this phase of operation the valves must bypass approximately 40 percent of the design flow with a fully unloaded compressor and low initial compressor differential pressure. This conservative design approach allows compressor starting when the available helium makeup gas storage pressures are relatively low. There has not been any difficulties associated with the gas management control system.

Flow orifice plates were installed on each main process flow stream to the refrigerator. Additional flow instrumentation provisions were made to test the performance of the compressors independently of the operation of the refrigerator. This was accomplished by placing flow orifice plates upsteam of each of the compressor bypass valves. A performance check of the compressor operation indicated nominal design flow rates with a flow balance indication error of 3 percent.

A new compressor oil removal system consisting of three stages of Monsanto oil coalescers, a single stage of carbon adsorber and a final particulate filter were added. Although the design allows the oil to be returned to either compressor stage, the oil is normally returned to the first stage since there is a normal oil carry-over from the first to the second stage compressor. Similiar oil removal systems used at CEBAF have been in continuous operation for eight years with great success. The oil removal system is functioning well with the majority of the oil removal occurring in the compressor bulk oil separator and the first coalescer.

During the initial running of the compressors at CEBAF the water contamination level in the helium gas process stream increased whenever the compressors were stopped. An investigation showed the compressor oil coolers were of the swaged tube design. Some tubes were leaking cooling water contamination into the helium gas system whenever the helium gas stream pressure was below that of the water system. Successful reswaging was completed but replacement oil coolers with a welded tube design were procured as a precautionary measure.

Compressor Summary. Currently the compression system, oil removal and gas management are working reliably with 3000 hours of operation. Much of those operational hours were unattended. Improvements, such as the replacement of the oil coolers and the addition of a third compressor (which may used as a first or second stage backup) are being made.

Refrigerator

Control System. The refrigerator or cold box was modified in a number of ways. The original control system was based on an obsolete programmable controller. Valve control was accomplished with separate electronic analog controllers. A determination was made that the system would be difficult to maintain due to the age of the devices and the availability of spare parts. The programmable controller system was replaced and the analog controllers were eliminated completely. The new programmable controller requires only 1/16th the space of the earlier model. It is identical to other controllers which have proven to be reliable at CEBAF. The duplication of the type of controller eliminated additional spare part inventories and personnel training. The former function of the analog loop controllers was replaced with direct CAMAC computer interface control.

The control logic of the refrigerator was modified to include the LBL operational experiences and concerns. Pressure switches were added to the outlet of the lower turbine to stop the turbine after starting if the outlet pressure drops below 2.3 bar or rises above 5 bar. This safety interlock prevents turbine damage should the downstream turbine flow be restricted or there is a danger of forming liquid on the turbine blades.

A pressure equalization valve was formerly designed to automatically depressurize the refrigerator high pressure supply stream whenever a compressor shutdown, power outage, or loss of instrument air occurred. The depressurization was changed to a manual operation to minimize the rate of turbine inlet pressure change as the turbine was being stopped.

The former control logic included a vapor pressure thermometer with a pneumatic amplifying relay for an automatic shutdown of the upper turbine in the event its inlet temperature became too cold. The accuracy of the turbine trip point was dependent on the turbine temperature ratio and the hystersis of the pneumatic devices. The design is being modified to monitor the turbine outlet temperature electronically as a more accurate monitoring means. All refrigerator silcon diode temperature sensors were replaced and all critical control sensors were spared. The control logic was also modified to isolate the cold box from the hall loads in the event of a refrigerator, utility, or compressor loss.

80 K Adsorber Beds. Originally the refrigerator did not have 80 K adsorber beds. Two redundant adsorber beds have been added to the system since the refrigerator is now being used for extended periods of time. The beds have been installed external to the existing cold box and are connected to the refrigerator by bayonets. Each bed is equipped with isolating valving, regenerative heaters, and instrumentation. An external manual gas management control panel provides the operator with the means to cooldown, warmup, and regenerate the beds. The adsorber beds will be used for the first time in August, 1995.

80 K Precooler. During the LBL plant operations, there was concern about accidently damaging the upper heat exchanger by freezing the LN_2 passage of the heat exchanger. Such an event could occur during a helium flow imbalance where excess cold helium gas or liquid was returned through the low pressure return piping of the refrigerator. To prevent this, the LN_2 precooling in the upper heat exchanger was eliminated. An existing auxillary internal rapid cooldown heat exchanger is now used in combination with a new LN_2 pool boiling heat exchanger to provide helium gas precooling. Flow diverter valving was added to warm

the nitrogen venting from the refrigerator. Under operation, the new design has performed well and is very stable.

Phase Separator. During initial CEBAF operation of the refrigerator, the internal phase separator with its liquid helium level instrumentation would not function properly. Liquid was carried over into the refrigerator low pressure return piping, resulting in a rapid oscillating lower turbine outlet pressure. This caused the lower turbine expander to shutdown. A replacement phase separator with a new subcooler has been designed and is presently being installed in the refrigerator. The new separator and subcooler will prevent liquid carryover and double the existing liquid volume capacity .

Refrigerator Summary. The refrigerator has been modified with a number of improvements. These have included the addition of a new LN_2 precooler, controls, turbine safety interlocks, 80 K adsorber beds, and the design of a new 4.5 K phase separator/subcooler. The refrigerator has been operated for 2000 hours, utilizing single upper turbine and dual turbine operation. The operations have included cooling the Hall B Torus Magnet and a Hall A dipole magnet to 4 K. During most of these operations, the refrigerator was unattended and it operated reliably.

CONCLUSIONS

The ESR system has been successfully commissioned. Although some of the major subsystems are approximately 18 years old, there were a number of factors which have helped the commissioning. These include low former operating hours, a design and capacity which had been previously proven suitable for our needs, the equipment was well cared for, and the existance of very accurate documentation of both the equipment and previous operating experiences.

ACKNOWLEDGEMENTS

The authors would like to thank all the members of the CEBAF Cryogenic Systems Group for their work in the design, fabrication, installation, and operation of the End Station Refrigerator Facility. They would like to also extend a special "thank you" to the staff of the CEBAF experimental halls and Lawrence Berkeley Laboratory for their support. This work is supported by DOE Contract #DE-AC05-84ER40150.

REFERENCES

1. C. H. Rode et al, "2.0 K CEBAF Cryogenics", in: "Advances in Cryogenic Engineering," Vol 35A, Plenum Press, New York (1990), p. 275
2. D. Kashy et al, "CEBAF Transfer Line Systems", in: "Advances in Cryogenic Engineering," Vol 37A, Plenum Press, New York (1992), p. 577
3. "End Station Parameters", in: "CEBAF Design Handbook," Chapter 6.2.2, Table 6.23, Rev. January 14, 1991, p. 6.2-4