Artificial Dielectric Ceramics for CEBAF's Higher-Order-Mode Loads *

Isidoro E. Campisi, Lynda K. Summers, Aldo Betto, and Ben H. Branson
Continuous Electron Beam Accelerator Facility
12000 Jefferson Avenue, Newport News, VA 23606-1909 USA

Abstract

The superconducting cavities of the Continuous Electron Beam Accelerator Facility (CEBAF) include 676 special loads fabricated with a new lossy ceramic material (AlN-glassy carbon) developed especially for CEBAF. The absorption of Higher-Order-Modes (HOM) RF power generated by the beam occurs inside the cavity vacuum at 2K. The cavity environment imposes strict conditions on the usable materials and the fabrication techniques. The absorbing material developed (based on the artificial dielectric model) is a ceramic with excellent vacuum, structural and thermal properties and has a complex permittivity independent of temperature between 1.5 and 700 K, making it an ideal material for superconducting cavity applications.

INTRODUCTION

The beam stability requirements for CEBAF's operation were studied by several authors [1, 2, 3]. The specifications derived by them indicate that HOM power to be extracted is of the order of few tens of milliwatts per load at 2 K. Because of the low power involved, it was decided that the loads would be kept at 2 K, thus avoiding expensive penetrations which also would be prone to vacuum accidents and to considerable heat leaks into the Helium bath. This design simplification imposed a series of constraints on the development of the loads themselves and on the choice of materials and assembly solutions.

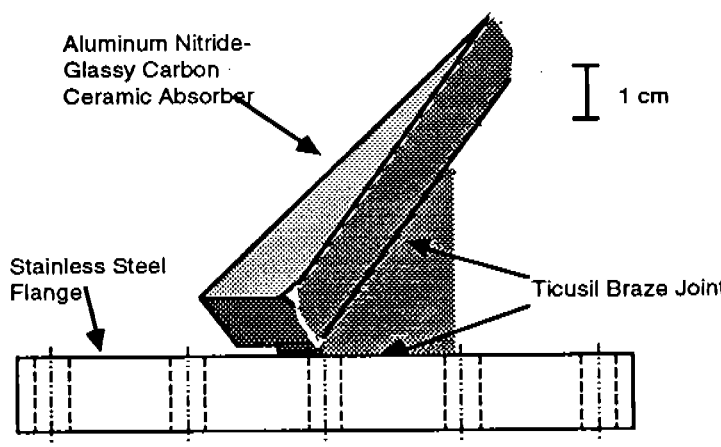

Figure 1: CEBAF's HOM load comprises the absorber (an Aluminum Nitride-Glassy Carbon ceramic composite) and a blank-off flange which must seal superfluid helium from the cavity.

Ceramic materials were chosen because they meet all of the conditions set by the accelerator environment. However, most available materials' dielectric properties are temperature-dependent, poorly characterized, or only loosely controllable. To overcome poor electrical performance, artificial dielectric ceramics were developed which can provide better control of the permitivity and a temperature-independent absorption. Artificial dielectrics consist of a dielectric medium in which conducting particles are embedded [4 ,5 ,6 ,7]. This arrangement provides absorption by ohmic losses within each conducting grain.

** Work supported by the US Department of Energy under contract # DE-AC05-84ER40150

The possibility of controlling the thermal, structural, dielectric, and vacuum properties is particularly useful in several accelerators being designed or built. It is especially useful in superconducting machines where the restrictions imposed by the cryogenic environment limit the materials choices (e.g.: LEP, TESLA)[8].

In this paper, we describe how ceramic artificial dielectrics have been applied to the construction of HOM loads for CEBAF. More broadly, this class of materials could be applied to the development of new high power, vacuum compatible microwave absorbers for use in several accelerator applications and to other more general systems which require microwave absorbers.

LOAD REQUIREMENTS

Although CEBAF will operate at the design current of 200 mA, the threshold current for transverse beam-breakup (BBU) instability shouldn't occur up to at least 14 mA [1,2,3]. The safety factor compensates for the little experience in operating multiple-recirculation superconducting machines, which could have HOMs with external Q's as high as 10^9-10^{10} if not properly damped. The return losses for each of the coupling ports (HOM and fundamental power coupler [FPC]) have been specified based on that threshold current of 14 mA. Because the cutoff frequency of the HOM waveguide (7.90 cm x 3.91 cm) is 1900 MHz, some modes of the TE_{111} passband can only be damped through the FPC, which is outfitted with a WR650, room temperature waveguide filter. The fundamental mode is below the cutoff of the HOM waveguide and its attenuation is 212 dB/m. Above 1900 MHz, the HOM waveguide TE_{10} mode starts to propagate and at higher frequencies (3800 MHz and up) other waveguide modes (TE_{01}, TE_{20}, TM_{11}, etc.) contribute to the extraction of HOM power from the cavity. The HOM absorbers must provide adequate absorption from 1900 MHz up to, in principle, 400 GHz, the maximum frequency for which the CEBAF bunch has Fourier components. Because the HOM spectrum can extend to such high frequencies, most of the HOMs will propagate as waveguide modes other than the TE_{10}, thus the HOM loads must be capable of absorbing many waveguide modes simultaneously. The loads should provide return losses of 10 dB or more at all frequencies of interest and for any waveguide mode.

Because the loads are in contact with the 2 K environment, the material must retain good thermal conductivity at low temperature and be thermally anchored to the helium bath to avoid overheating and infrared emission from the load. The material's differential thermal contraction must be taken into account in the load's design. To allow testing at room temperature their absorption should be temperature independent.

Very tight vacuum requirements are imposed on the HOM loads' material as the loads share the same vacuum of the superconducting cavity at a level of 10^{-10} torr or lower. The material must not produce any particulates and it cannot have open porosity which could trap contaminants that may later be adsorbed onto the cavity surface. The desorption rate from the loads must be lower than the allowed leak rate from cavity joints, a limit which is placed at around 10^{-10} atm cc/(cm^2 sec).

Since the loads are located within the cryostat, limited space is available and they must be compact and mechanically stable to avoid the excitation of microphonic vibrations. The load material must be brazeable to ensure thermal contact to the bath and strong mechanical construction.

OPTIONS INVESTIGATED

Various options were considered and some of them investigated in the development of the HOM loads. The use of a separating window between the load and the cavity vacuum was deemed too complicated and prone to vacuum failures. Also, a window with low VSWR over a very broad frequency range and for a multitude of waveguide modes is difficult to achieve.

Nichrome films of various temperature independent surface resistance deposited onto alumina substrate cards were also considered. This solution works well for a single mode in a waveguide over a narrow band, but it is not very effective for modes with electric field orthogonal to the plane of the film and even a careful placement of the card in the waveguide and a proper choice of angles may not provide adequate absorption.

As an extension of the card concept, catalytic converter substrates were tested. Many planes are available perpendicular to each other with proper projection of the electric field components for many waveguide modes. The problem of depositing the resistive film in the narrow channels was overcome, but the manufacturing steps were complicated and cumbersome. Moreover, the large surface area of the honeycomb ceramics being incompatible with the ultra-high vacuum requirements and the poor thermal conduction to the bath led us to reject this solution.

Ultimately, solid lossy ceramics based on Silicon Carbide composites were considered and deemed structurally sound and vacuum compatible. These materials were used in the design of the loads in the present shape. However, Silicon Carbide based ceramics did not show reproducible and temperature independent absorption. Hence, new materials had to be developed.

CEBAF HOM LOADS

The cutoff frequency of the HOM waveguides is 1.9 GHz for the TE_{10} mode. Above 3795 MHz, additional modes (TE_{20}, TE_{01}, TE_{11}, TM_{11}, etc.) propagate in the waveguide, contributing to the extraction of the HOM power. Since the best matching of a dielectric absorber to the electromagnetic waves occurs at locations where the electric field is lowest, the design of the load is such that its leading edge is as close as possible to the corner where the electric field is zero for all TE waveguide modes which dominate the HOM power spectrum at the lower and most critical frequencies (**Figure 1**). Many shapes and combinations were considered to optimize the absorption spectrum. The measurements of broad-band, multi-mode return losses were performed with a mode-sensitive microwave time-domain reflectometry system specifically developed for this purpose. From these studies, a very compact load design [9] was derived which can be assembled in a few economical manufacturing steps (**Figure 1** and **2**).

The load protrudes less than 7 cm into the waveguide. Due to the relatively large permittivity, the short load is capable of providing adequate absorption even at frequencies for which the guided wavelength is more than ten times the physical length of the absorber.

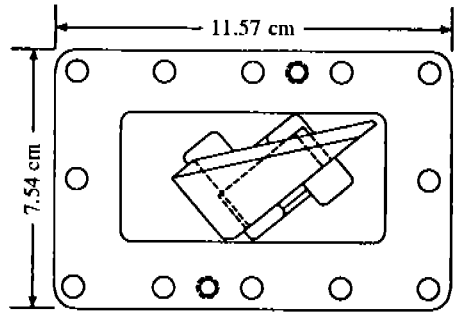

Figure 2

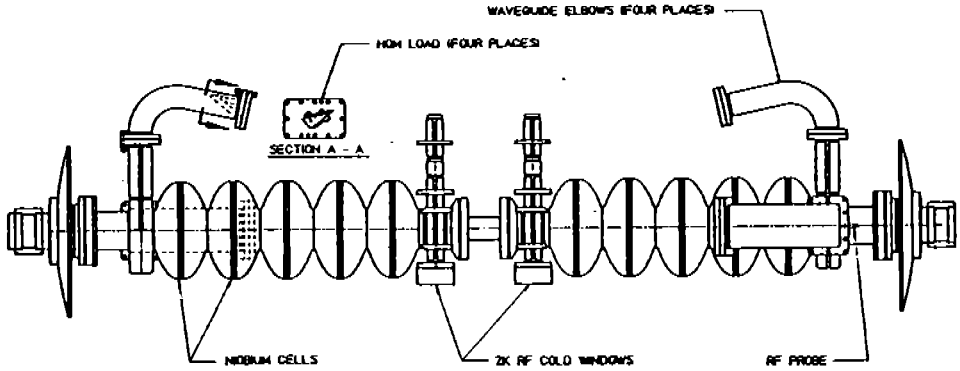

Figure 3: The HOM loads are inserted at the waveguides end located at the extreme of the cavities. In each cavity are installed two loads with different orientation to control orthogonal polarization of dipole modes.

The core of the load is the new absorber's ceramic material developed on the basis of the artificial dielectric model. When conducting particles are placed inside an insulating dielectric matrix, the dielectric properties of the original matrix are substantially modified and the new composite is called an artificial dielectric.

The concentration of the conducting particles alters the effective dielectric permittivity of the host material, but it also has a secondary effect on practical materials. If the volume concentration of the conductive phase is larger than 15 %, then aggregation of particles can take place (Figure 4). In this case, loss mechanisms other than pure ohmic losses within the elementary grains can occur, and these additional losses will be temperature dependent. If the conductor's concentration approaches or exceeds 50%, then a metallic behavior will screen the currents from the bulk of the material and absorption will be inhibited (at or above the percolation threshold). To avoid temperature dependent absorption (at least from 0 K to several hundred degrees °C), one must rely solely on the metallic behavior of the minority powders in concentrations below 15 % by volume and choose powders with the proper sizes and resistivity.

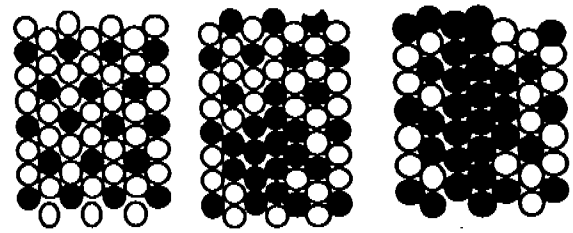

a b c

Figure 4: At or below 15% by volume (a), the conducting particles are on the average fully separated and only losses within grains are important. Between 15% and 50% (b), clustering occurs leading to temperature-dependent losses. Above 50% (percolation threshold) (c), long range conductive behavior sets in with bulk screening currents preventing absorption.

Although artificial dielectrics have been realized in practice with many materials, most of them have little practical application in vacuum systems because the dielectric matrix is made with polymers or other organic materials [10]. In our application, a ceramic material is desirable for the vacuum, structural, and thermal properties. However, little work has been done so far on these materials, mostly because of a number of incompatible restrictions imposed on them [11].

The conductivity of the powders can be altered by high temperature treatment since, for instance, recrystallization at high temperatures tends to lower the resistivity, whereas impurity diffusion tends to increase it. Often, unpredictable conductivities can result from these competing mechanisms. Of the materials which can survive the sintering process, there are just a handful of metals, semimetals, alloys and compounds such as W, Mo, Ta, Nb, C and a few other rare metals and their alloys. Most of these materials and compounds can be obtained in a powder form, for instance, through plasma spraying techniques [12]. Several materials were sintered [13] in a ceramic form in order to produce specific dielectric properties which would meet the required absorption for CEBAF [1]. Among the materials that were tested, **Table 1** reports some mixtures of ceramics composed of AlN as a matrix coupled with conductive powders of Mo, TiC and glassy carbon (an amorphous form of carbon obtained by pyrolysis of phenolic resins) [14]. The relative dielectric constant of AlN is 8.5. The data in **Table 1** on the following page show the increase in dielectric constant due to the presence of the conductive powders.

Table 1: Physical Properties of Conducting Powders

Mat.	T Melt (°C)	Avg. grain size (μ)	Volume loading (%)	ε_r @ 2 GHz	tg δ @ 2 GHz	ρ [mΩ x cm]	δ @ 2 GHz (μm)
Mo	2617	2.7	12	10	0.02	5.7	2.7
Mo	2617	2.7	15	19.5	0.01	5.7	2.7
Mo	2617	2.7	16	27.5	0.02	5.7	2.7
TiC	3140	15	16	67.5	0.18	170	14.7
TiC	3140	1.3-3	16	18	0.01	170	14.7
TiC	3140	1.3-3	18	23	0.03	170	14.7
TiC	3140	1.3-3	20	32	0.07	170	14.7
C	3550	3-12	15	22	0.16	1k-5k	35-80
C	3550	20-50	15	33	0.22	1k-5k	35-80

At the frequencies presented, the loss tangent of AlN is negligible compared to the loss tangents of the composite materials. Therefore most of the losses occur within the conductive grains. The minority conducting phase is always held near or below 15% in order to avoid temperature dependent phenomena. In the case of glassy carbon, this choice of concentration also provides structural strength even though glassy carbon does not sinter with the dielectric ceramic. Larger concentrations would make the structure unstable. Structural integrity considerations not only limit the powder concentration, but also the size of the powders that can be used. Whereas for general artificial dielectrics any powder size can be used, as long as it satisfies the electrical properties criteria, in sintering ceramic structures, only a limited range of powder sizes is permissible in order to maintain structural integrity of the composite ceramic. Typical sizes range from less than a micron to several tens of microns. This size limitation has also an impact on the range of grain resistivities which can be chosen to more effectively damp the microwave frequency band.

Table 1 also gives the expected skin depth in the grains at 2 GHz, a critical frequency to be damped in the CEBAF cavities. For most powders, the skin depth and the grain sizes are chosen to be very close to each other at this frequency. However, the bulk resistivity of powder grains is a poorly known quantity, usually very dissimilar from that of the bulk crystalline metal, for which one can refer to published values. Moreover, even if the powder resistivity is known before the sintering, the high temperature treatment can have some effect on the powder resistivity, either decreasing it by recrystallization, or increasing it by impurity diffusion. Thus the choice of conducting powders must be made through educated guesses and some trial and error procedures, rather than by careful and controlled calculations and predictions. The theoretical skin depth of the various materials is calculated at 2 GHz for published values of conductivity of bulk materials [15], except for glassy carbon,. Its conductivity is derived from data of Guillot et al. [16]. For the production of absorbers in the accelerator the AlN-glassy carbon ceramic was chosen.

Measurements of permittivity and loss tangent were performed using an HP85070A dielectric probe kit coupled with an HP8753C network analyzer. Samples of these materials have been tested for RF properties at room temperature to obtain baseline dielectric data, and then absorbers were cooled to 2 K to determine the presence or absence of thermally induced absorption phenomena. All of the materials presented here showed no modifications of the dielectric properties with temperature, unlike other samples containing SiC, which show low temperature changes of dielectric properties.

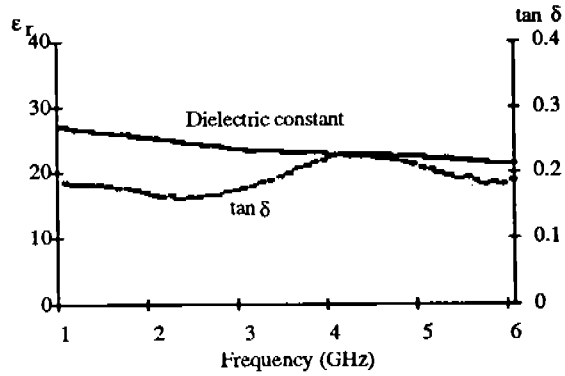

Figure 5: Dielectric constant and loss tangent of AlN loaded with glassy carbon. AlN alone has a dielectric constant of about 8.5 and a loss tangent < 10^{-4} at room temperature.

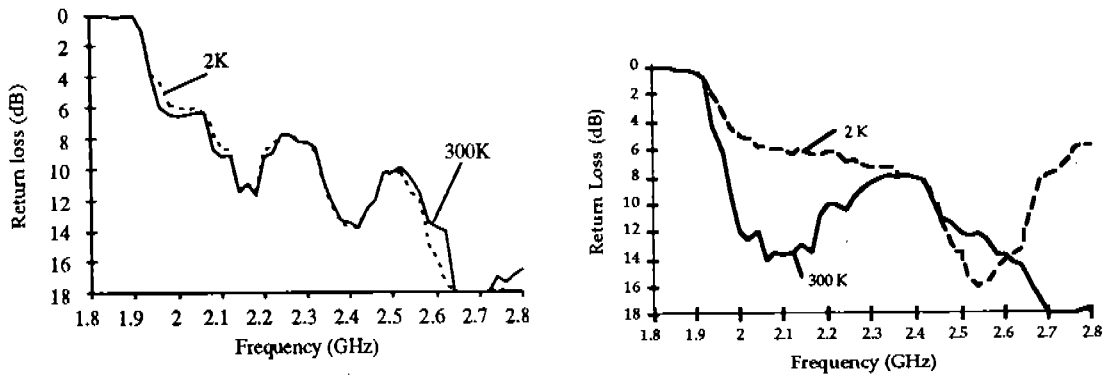

Figure 6: Return Loss of AlN/GC (left) and AlN-40%SiC (right) measured at 2 K and at room temperature.

For comparison, **Figure 6** shows the return loss measurement of the AlN/40% SiC tested in the same range of frequency and temperature. The behavior at low temperature is remarkably different from that at room temperature.

The ceramics obtained for microwave absorption also possess other properties which make them attractive for many applications. Their vacuum properties are excellent with outgassing rates lower than 10^{-11} atm cc/(cm^2 sec) [17, 18] and they are brazeable by means of active brazing alloys without need of metallization. Their dielectric properties have also been tested up to 400 °C [19] with little variation of the dielectric permittivity and loss tangent.

Figure 7: SEM image of the ceramic material

PRODUCTION

Most of the fabrication steps for the production of the HOM loads were developed at CEBAF and several assembly procedures were performed in the laboratory to guarantee uniform quality and control of production parameters.

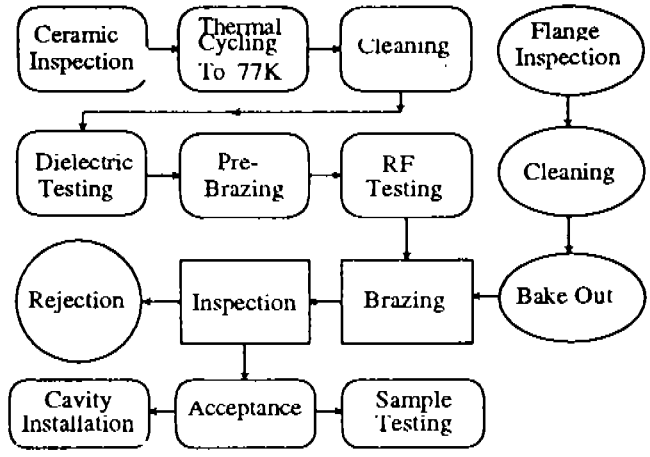

Figure 8: Flow chart of the production process. At any step before the final braze, parts can be rejected and/or reworked without major loss of added value. A fraction of the accepted loads undergoes more severe tests.

The ceramics are manufactured by industry [13] as hot-pressed tiles which are tested prior to cutting and approved for compliance with the previously mentioned dielectric properties' ranges. The ground parts are again tested with the dielectric probe to ensure repeatable microwave performance. Approved ceramic parts are brazed together in high vacuum with Ticusil®, (Wesgo), and the loads' return losses measured before final brazing to the support flange. The temperature ramp rate to and from the melting point of the alloy (830 °C) is controlled to avoid thermal stresses to ceramic material.

The 316L stainless steel flange with 16 μin electropolished surface finish provides a backing for the indium seal. A copper support is brazed to the stainless steel flange. The copper part prevents excessive stresses at the ceramic-to-metal braze. In other applications, this copper support can also be thermally grounded either to the helium bath or to other heat sinks to remove larger amounts of dissipated power.

Flange inspections ensure that the surface finish requirement of 16 μin, or better, is consistently met at the indium sealing surface area. The flange surface is also visually inspected for stains, scratches, machining

marks, pits, and other imperfections which could lead to unreliable vacuum seals and/or possible surface contamination of the cavities. Any surface irregularity within the sealing surface is cause for flange rejection. Special care is also taken to measure the dimensions of the copper insert in the flange. Tight dimensional tolerances are required to make the ceramic-to-copper braze structurally strong and insensitive to the thermal cycling.

As **Figure 1** shows, the load consists of two ceramic parts. Every ceramic piece is inspected for dimensional tolerances as well as for the presence of any visible flaws such as chips, laminations, cracks, or inclusions. Ceramic parts are then thermally shocked three times by submersion into liquid nitrogen to test the structural integrity of the material.

Return loss measurements are performed on the brazed ceramics at room temperature using a single test flange. The final braze of the ceramics to the flange is performed after the return loss measurement to eliminate the possibility of damaging a cleaned flange during RF testing.

In excess of 1400 AlN-glassy carbon ceramic parts have been processed, have undergone extensive testing and inspections, and have been utilized in the construction of more than 650 HOM loads. Although occasional deviations from specifications have been observed, the production has proceeded with consistent results.

Over the production, only one installed load is known to have failed. This load had an improperly brazed ceramic set which came into contact with the waveguide during installation and a crack developed in the ceramic when the flange was tightened.

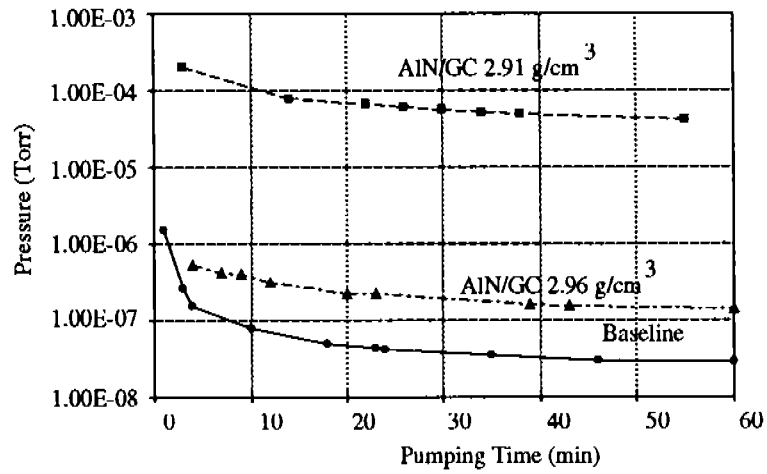

Figure 9: Comparison of vacuum pump-down times for two lots of AlN/GC with differing densities.

Variations in dielectric constant of the ceramic composite over the production have ranged, by as much as ± 10% from lot to lot. The variation seems to be associated with minute density differences of the ceramics. Lot-to-lot variations can be compensated for by adjustments in the concentration of the glassy carbon (by as little as 0.1% by weight). This control on the dielectric constant is a primary advantage of artificial dielectric composites and makes it possible to consistently maintain this parameter over large production quantities.

Most of the ceramic material manufactured by Ceradyne meets and exceeds the UHV standards needed for installation in the superconducting cavities. One batch of ceramics manufactured from a specific glassy carbon lot yielded parts with slightly lower density (less than 1%) but with notably higher baseline pressure (Figure 9). By standard thermogravimetric analysis of the glassy carbon powders prior to hot pressing, it is however, possible to select lots which predictably provide parts with full density and extremely low out-gassing rates.

weight). This control on the dielectric constant is a primary advantage of artificial dielectric composites and makes it possible to consistently maintain this parameter over large production quantities.

Most of the ceramic material manufactured by Ceradyne meets and exceeds the UHV standards needed for installation in the superconducting cavities. One batch of ceramics manufactured from a specific glassy carbon lot yielded parts with slightly lower density (less than 1%) but with notably higher baseline pressure (Figure 9). By standard thermogravimetric analysis of the glassy carbon powders prior to hot pressing, it is however, possible to select lots which predictably provide parts with full density and extremely low outgassing rates.

CONCLUSIONS

HOM loads have been developed at CEBAF using a ceramic material developed explicitly for this low temperature application and with a very compact and original geometric design .

The production of 676 loads for the machine has been completed with very reliable and repeatable electrical properties of the absorbers. Varied vacuum properties of some ceramic lots have been identified and methods have been established to select ceramic powder lots which give consistently good results.

The material developed at CEBAF has properties such as temperature independent absorption, good thermal conductivity, brazeability, and low outgassing rates which make it applicable to systems containing superconducting cavities.

REFERENCES

[1] J.J. Bisognano, CEBAF Note TN-0147, July 1989

[2] R.M. Sundelin, CEBAF Note TPN 91-013, Sept. 1991

[3] J.J. Bisognano, Private communication, Nov. 1991

[4] See, e.g., J.M. Ziman, Electrons and Phonons, Oxford (1960),Ch. 9

[5]R.E. Collin, Field Theory of Guided Waves (2nd ed.), New York(1991), Ch. 12

[6]I.S. Jacobs, "Advanced Artificial Dielectric Materials for Millimeter Wavelength Applications," Report 90-SRD-001, GE CRD, Schenectady, 1990, and references therein

[7]N.E. Russell, J.C. Garland, and D.B. Tanner, ``Absorption of Far-infrared Radiation by Random Metal Particle Composites," Phys. Rev. vol. B23, pp. 632-639 Jan. 1981 and references therein

[8] Proceedings of the First Workshop on Microwave-Absorbing Materials for Accelerators (MAMAs), (I. E. Campisi and L. R. Doolittle, Eds.) CEBAF, Newport News, Virginia, February 22-24, 1993. (In print)

[9] Campisi, I. E., U. S. Patent No. 07/522,131.

[10] W. T. Doyle and I. S. Jacobs, ``Effective cluster model of dielectric enhancement in metal-insulator composites," Phys. Rev. B 42 , (15), 9319–9327 (1990).

[11] I. E. Campisi, L. K. Summers, K. E. Finger, and A. M. Johnson, "Microwave absorption by lossy ceramic materials", in Microwave Processing of Materials III, *Proc. MRS Symposium.* Vol. 269, 157–162 (1992).

[12]. R. F. Cheney, R. L. Daga, R. M. German, A. Bose, and J. W. Burlingame, ``Heavy alloys from rapidly solidified powders," Proceedings of the 1988 International Powder Metallurgy Conference and Exhibition , Orlando, Florida, June 1988.

[13] Sintering done by Ceradyne, Inc., Costa Mesa, Ca.

[14] Manufactured by SIGRI, Inc.

[15]. CRC Handbook of Chemistry and Physics , 62nd ed.

[16]. T. Guillot and G. Bobillot, ``Mesure en hyperfrequence de la conductivite' electrique d'un grain elementaire d'une poudre conductrice," presented at SEE Conference, Limoges, 1991.

[17] I. E. Campisi, K. E. Finger, L. K. Summers, and A. M. Johnson, ``Higher-Order-Mode Damping and Microwave Absorption at 2 K," presented at the Third European Particle Accelerator Conference, Berlin, March 24-28, 1992.

[18] Nguyen-Tuong, V., "Vacuum outgassing of artificial dielectric ceramics", Jour. Vac. Sci. Tech. A (To be published).

[19] Hutcheon , R. , de Jong, M. S., Private communication, 1992