CEBAF PR-93-027
JUNE 1993

CEBAF Commissioning Status

A. Hutton
Continuous Electron Beam Accelerator Facility
12000 Jefferson Avenue
Newport News, VA 23606

CONTINUOUS

ELECTRON

BEAM

ACCELERATOR

FACILITY

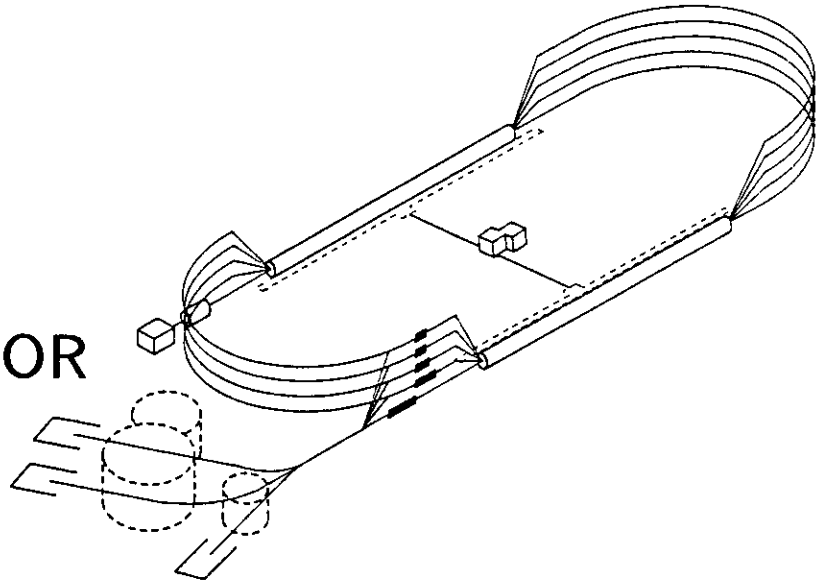

SURA SOUTHEASTERN UNIVERSITIES RESEARCH ASSOCIATION

CEBAF

Newport News, Virginia

Copies available from:

Library
CEBAF
12000 Jefferson Avenue
Newport News
Virginia 23606

The Southeastern Universities Research Association (SURA) operates the Continuous Electron Beam Accelerator Facility for the United States Department of Energy under contract DE-AC05-84ER40150.

DISCLAIMER

This report was prepared as an account of work sponsored by the United States government. Neither the United States nor the United States Department of Energy, nor any of their employees, makes any warranty, express or implied, or assumes any legal liability or responsibility for the accuracy, completeness, or usefulness of any information, apparatus, product, or process disclosed, or represents that its use would not infringe privately owned rights. Reference herein to any specific commercial product, process, or service by trade name, mark, manufacturer, or otherwise, does not necessarily constitute or imply its endorsement, recommendation, or favoring by the United States government or any agency thereof. The views and opinions of authors expressed herein do not necessarily state or reflect those of the United States government or any agency thereof.

CEBAF Commissioning Status*

Andrew Hutton
for the CEBAF Commissioning Group
Continuous Electron Beam Accelerator Facility
12000 Jefferson Avenue, Newport News, VA 23606-1909 USA

Abstract

CEBAF is a 4 GeV, 200 μA CW electron accelerator, recirculating the beam five times through two superconducting linacs. The accelerator itself is not due to be completed until January 1994 but CEBAF has been accelerating beams for more than a year and has already validated many of the design concepts. In the injector, 340 μA have been accelerated to 45 MeV. In a recirculation experiment, 215 μA have been accelerated to 80 MeV, demonstrating by extrapolation that the full 5 pass machine will operate well below the recirculating beam break-up threshold. In the north linac, beam has been accelerated to over 245 MeV using 99 superconducting cavities at an average gradient of 5 MeV/m. The beam characteristics mostly meet or exceed specifications. Beam has been taken around 135° of the first arc and the optical properties have been studied. High current tests in the north linac resulted in several runs of more than 100 μA being accelerated through more than 120 superconducting cavities.

I. INTRODUCTION

CEBAF is a 4 GeV, 200 μA CW accelerator with 5 passes through two 400 MeV superconducting linacs. The superconducting linacs use 1497 MHz five-cell niobium cavities operated at 2° K with a nominal gradient of 5 MeV/m and a Q_0 of 2.4×10^9. There will be three interleaved beams at 499 MHz with independent current control. Beam from any recirculation pass can be delivered to any of three experimental halls using RF separators Exceptional beam quality is required for the physics program: 4 σ emittance less than 2×10^{-9} m-rad above 1 GeV and 4 σ energy spread less than 10^{-4}.

II. CONSTRUCTION STATUS

A. General

The civil construction is complete, including the three experimental halls. The accelerator is now 88% complete and 92% committed, with completion due in January 1994. The first experiment will be ready for test beam in June 1994 with the other experiments coming later as dictated by the funding profile. The entire installation should be complete by summer 1996. The east spreader, recombiner, and the five east arc lines are complete, under vacuum, and aligned. The four west arc lines are 75% complete and 75% under vacuum.

* Work supported by Department of Energy contracts DE-AC03-76SF00515 and DE-AC05-84ER40150

B. Rf Superconductivity

The 5-cell superconducting cavities are based on a Cornell/CEBAF design and are made of high RRR niobium, supplied by CEBAF for fabrication by industry (Siemens AG). The vendor does the initial field flattening and tuning of the cavity frequency. CEBAF completes the cavity tests, and assembles them in the cryostat. To date, $28^1/_4$ cryomodules (each containing eight 5-cell cavities) have been completed and installed in the machine (113 active meters) out of a total of $42^1/_4$ (169 active meters); of these 15 have been used to accelerate beam. A production rate of two cryomodules per month has been maintained for over twelve months, and this rate will continue through the completion of the second linac.

The cavities are significantly better than design specification, with a mean usable accelerating gradient of 7.2 MV/m defined as the minimum gradient defined by one of three limits:

$Q_0 = 2.4 \times 10^{-9}$, or
Field emission heat load = 1 W, or
1 MV/m lower than the quench gradient.

There is little or no systematic degradation seen between vertical dewar cavity tests and tests of cavities installed in the tunnel. The detailed performance figures are given in another paper in this conference[1].

C. RF Power System Status

The RF power sources consist of one 5 kW klystron per 5-cell cavity with eight klystrons having a common high voltage power supply, low level controls, and CAMAC interface. There are 43 of these systems, 20 in each linac, and 3 in the injector (or to be exact $2^1/_4$). At present 31 systems have completed low level checkout, and 28 have passed high level checkout (full power into waveguide shorts). The control system performance has been validated in the Front End Test (Table 1) and the master oscillator has passed the acceptance test.

Table 1. RF Control System Performance

Uncorrelated gradient noise	$< 1.5 \times 10^{-4}$
(Specification	$< 2 \times 10^{-4}$)
Correlated gradient noise	$< 1.1 \times 10^{-5}$
at 60 Hz	$< 2 - 3 \times 10^{-5}$
(Specification	$< 1.1 \times 10^{-5}$)
Phase noise	< 0.1°
Slow phase variations not yet measured	
(Specification	< 0.25°)

D. Cryogenic System

There are three major refrigeration systems. The cryogenic test facility provides 2° K and 4.5° K helium for the SRF Test Laboratory to support cavity production and measurements of the experimental magnets. It now has 32,000 hours of operation with no major problems.

The end station refrigerator with its 0.6 km of transfer line supports the experimental hall magnets and is rated at 1.5 kW at 4.5° K. Purification of the liquid helium is now in progress and cool-down of the Hall C dipole is scheduled for June 1993.

The central helium liquifier with its 1.4 km of transfer lines supports accelerator operation and is rated at 4.8 kW at 2° K. During the running period, the cold compressors were not available due to a series of electrical failures. A vacuum pump was installed to support accelerator pre-commissioning and 16,000 hours operation have now been accumulated with vacuum pumps at 2.0° K–4.2° K. A second pump was commissioned in February to provide additional capacity but it shattered its rotor after 1 hour of operation. At present, the cold compressors have been redesigned, reinstalled, and have achieved 3.35° K operation. Commissioning will continue this summer.

Beam energy during the pre-commissioning was always limited by the available cryogenic capacity and operation was at 2.3° K rather than 2.0° K to minimize the load on the vacuum pump.

III. COMMISSIONING

A. Strategy

The commissioning is organized around Teams. Each Team consists of a small group of people with different skills and backgrounds who, together, search for the "best solution" to a particular problem. The principal thrust of the entire commissioning and operations efforts is to make the machine operate well for experimental physics. The interaction between different disciplines is maximized to make this process as efficient as possible, where efficiency is defined as the shortest commissioning time to provide quality beams to the experiments.

The commissioning Teams that have been established to date are:

Harp Team
Diagnostics Checkout Team
Control System Speed Team
RF Commissioning Team
High Current Team
High Gradient Team
Arc Commissioning Team

The commissioning studies described in this paper are largely the work of these Teams.

B. Commissioning Schedule

There is a global commissioning plan which is shown in Table 2. Pre-commissioning started in January 1992 in the injector region and continued through April 1993. During this time, temporary shielding walls were put up to enable installation to occur downstream of the zone with beam. The whole machine is currently down to complete installation. Tests of the upgraded injector will begin in October 1993 and commissioning of the whole machine is scheduled to start in January 1994.

Table 2. Commissioning Overview

Phase 1 Pre-Operational Tests-low power (<17 kW)
- Stage 1 Front end test (completed)
- Stage 2 North linac low power beam test (completed)
- Stage 3 East arc low power beam test (completed)

Phase 2 Pre-Operational Tests-high power (<120 kW)
- Stage 1 North linac high power beam test (completed)
- Stage 2 South linac high power beam test

Phase 3 Commissioning
- Stage 1 Commission single-pass operation, start delivery of nominal 800 MeV, 200 μA beam to Hall C
- Stage 2 Tests of 2, 3, 4 and 5 pass operation to 4 GeV (nominal)
- Stage 3 Three-beam distribution tests

IV. INJECTOR

A. Performance

The injector consists of a thermionic gun, copper cavities accelerating to 500 keV, 1497 MHz choppers and $2^1/_4$ cryomodules (9 active meters of superconducting cavities). The nominal beam energy of 45 MeV was easily achieved The nominal average beam current of 200 μA CW was also easily achievable, indeed 340 μA CW was obtained without great heroics. The transverse emittance is below 20 nm-rad in both planes (spec. = 44 nm-rad), the longitudinal emittance is below 5π keV-degree (spec. = 15π keV-degree). In routine operation, the bunch length obtainable is 0.4 degrees at 1.497 GHz (spec. = 1.5 degrees or 2.8 ps).

B. Turnkey Operation

A considerable amount of effort was devoted to trying to make the operation of the injector complex "turnkey". These tests were a prelude to establishing similar performance for the entire north linac.

"Turnkey operation" was defined as:
Start-up with all systems un-powered and obtaining spec. 45 MeV beam entering north linac, verifying:

- Beam momentum at nominal 500 keV
- Beam momentum at nominal 5 MeV
- Beam momentum at nominal 45 MeV
- Bunch length at entrance to first cryomodule
- Proper steering through entire beam line

The goal established for this was 25 minutes. On the best day, the entire sequence was repeated three times in succession in an average time of 24 minutes. However, start-up after a weekend shutdown was considerably slower, mainly due to problems with the phase reproducibility of the warm copper cavities. The whole injector complex is currently being rebuilt to include 499 MHz choppers and the new installation should correct the problems found. In addition, the early production cavities that were installed in the injector are being replaced by two of the very best late-production cryomodules. This should provide an operational safety margin when running the injector day in and day out.

C. Front End Test

In the Front End Test, two 180° doubly achromatic bends were installed in the injector region to permit beam to be recirculated through the two cryomodules. Fourteen quadrupoles were installed to provide dispersion-free beam transport and independent adjustment of the x and y planes.

Using this experimental set-up it was possible to examine the beam break-up instabilities which could be caused by the superconducting cavities. It was demonstrated that a total of 215 μA could be accelerated in two passes to an energy of 80 MeV. Since the injection energy into the two cryomodules was only 5.5 MeV compared to the nominal energy of 45 MeV for injection into CEBAF, this result indicates that the full 5-pass machine will operate well below the recirculating beam break-up threshold. This experiment and the simulations are described in another paper at this conference[2].

V. LOW CURRENT TESTS

The low current tests were the first attempts to operate a large number of superconducting cavities simultaneously, but only part of the north linac was involved. At that time, a total of 104 five-cell cavities, each with its own klystron and independent controls, was available for acceleration. Due to the cryogenic limitations discussed in Section IIB, it was not possible to sequentially set up each cavity at the nominal accelerating gradient. Instead, each cavity was set up and phased at a gradient of 2 MeV/m and the cryostats were overfilled with helium. All the cavities were then simultaneously ramped in gradient up to the nominal value. The tests were scheduled over a four week period with operation for two days every week, the remaining time being spent correcting problems and increasing the number of cavities that could be operated simultaneously.

On the best run, 99 superconducting cavities (93% of those available) operated at the design gradient of 5 MV/m. Beam was accelerated to 245 MeV and the energy confirmed with a spectrometer.

Energies over 200 MeV could be obtained only briefly due to the cryogenic limitations but several multi-hour beam runs were completed at up to 148 MeV.

During all these runs, the average current was limited to approximately 1 μA, both for machine protection reasons and because a suitable high-power dump was not yet available.

These tests demonstrated successful operation of multiple RF systems from high level screens, and a large amount of operational experience (both personnel and equipment) was gained.

VI. HIGH CURRENT TESTS

A. RF Considerations

For these tests, the high power dump had been installed, the beam loss monitors calibrated, and the machine protection system set up[3]. As before, the energy was limited to 130 MeV by the cryogenic system rather than the nominal 400 MeV.

The maximum current achieved was 110 μA CW, maintained for over 10 minutes (compared to the specification of 200 μA). The limitation was the time available for adjusting the beam loss monitors to provide adequate, redundant coverage without causing spurious trips. There was no obvious technical limitation, indeed the stability of the beam was impressive since none of the feedback systems were operational during these runs.

However, the first tests of the energy vernier system were successfully carried out[4], demonstrating that the errors in beam energy could be detected and corrected on a slow (≈3 Hz) time scale.

The neutron source terms from the beam dump were measured by lowering detectors down a penetration. These measurements are needed to cross-check the shielding calculations to ensure that CEBAF will be operated within the safety envelope.

B. Cavity Considerations

Many theoretical calculations and operational measurements were carried out to support high current running. Cavity phasing algorithms[5] and an algorithm for an automated search for the resonant frequency of the cavity[6] were developed and tested successfully. Cavity steering and focusing effects were measured but the measurements are hard to interpret and are not in agreement with the theory[7]. Beam loading algorithms[8] and techniques for bypassing un-powered cavities and cryomodules were developed, coded and successfully tested with beam.

RF performance was confirmed under heavy beam loading conditions by comparing the signals picked up by a probe in the cavity during operation at different beam currents. The probe signals are essentially identical, indicating that the RF control module was performing correctly.

C. Optics and Beam Quality Measurements

An auto-steering algorithm was developed and tested[9] and initial tests of semi-automated beam quality measurement techniques were performed.

The beam characteristics of a 36 μA pulsed beam were measured at 121 MeV at the end of the north linac. The energy spread was 9×10^{-4} (spec. = 5×10^{-4}) and the horizontal and vertical emittances were 0.7 and 1.8 nm-rad (spec. = 4 nm-rad). The extremely small emittance is confirmed by the experimental observation that it is possible to drift the electron beam down the entire linac without focusing. The measurement of energy spread is believed to be larger than specification due to drift in the injector region as was discussed in Section IVB.

VII. HIGH GRADIENT TEST

A. Cryomodule Limitations

When superconducting cavities are installed in cryomodules, their performance is limited by interlocks designed to protect the cavities from irreparable damage. In the CEBAF cryomodule, there are arc and infrared detectors for cold and warm windows on the input waveguide and an interlock on the waveguide vacuum.

The maximum usable gradient is limited to values defined during the cavity commissioning. The limits are given by the requirement that the field emission power should be less than 1 W and that the maximum gradient should be 1 MV/m less than the level at which the cavity quenches.

With these constraints, the average usable gradient for the CEBAF cryomodules is 7.2 MV/m compared to the average gradient of 8.4 MV/m for the bare cavities. This is a fairly typical result for complex superconducting cavities

Operation in the commissioning phase was limited by the cryogenics as discussed above. However, by running most of the cryomodules at low gradient, it was possible to push a complete cryomodule to the limit given by the cavities.

Table 3. Measured Accelerating Gradients

Cavity	Gradient	Limitation
1	6.8 MV/m	Field Emission
2	8.2 MV/m	Field Emission
3	9.2 MV/m	Quench
4	8.7 MV/m	Quench
5	9.6 MV/m	Quench
6	10.9 MV/m	Quench
7	7.7 MV/m	Field Emission
8	6.3 MV/m	Quench

B. Results

Initially, the gradient was limited to 5 MV/m by the infrared detectors. It was determined that the trip levels could be raised without endangering the windows. In subsequent runs, a complete cryomodule (8 cavities) was operated at an average accelerating gradient of more than 8 MeV/m (specification = 5 MeV/m) and this gradient was cross-calibrated with a spectrometer. This gradient was maintained for up to a shift.

The detailed list of achieved gradients in the 8 cavities is given in Table 3.

VIII. EAST ARC TEST

A. Description of Layout and Optics

The optics of the Linac is a straightforward 120° FODO lattice for the lowest energy passage and a proportionally smaller phase advance for the higher energy beams. At the end of the linac, the different beam energies are separated into their respective arcs in the spreader region and then matched into the arcs in the extraction region. At the other end of the arcs the beams are brought together in the recombiner region, which is almost a mirror image of the spreader region.

Beam tests of the optics were done at 130 MeV, rather than the nominal 400 MeV for which the first arc was designed. This caused some difficulty in matching magnets in the spreader region, which are on a common bus. These magnets were matched at the nominal energy and they have different saturation characteristics at lower energies. This provided more stringent requirements on measuring and correcting optical errors than will be required for the nominal conditions.

The CEBAF arcs are designed to be both achromatic and isochronous. There are four similar achromats per arc and the required conditions should be reproduced at the 45°, 90°, and 135° points as well as the complete 180° arc. As installation of the south linac was proceeding in parallel with the beam commissioning in the north linac and east arc, a low power beam dump was inserted at the 135°with a shielding wall behind it.

The section of the machine that was available for pre-commissioning therefore enabled all the relevant properties of the linac optics, spreader, matching region and arcs to be tested.

B. Initial Beam Transport

It was first determined that it was possible to bring beam, loss-free, to the beam dump at the 135° point using a simple 120° optics. This demonstrated that all of the hardware was correctly hooked up. A calibration problem was also diagnosed and corrected at this time.

The nominal, isochronous and achromatic optics was then used and the beam run to the dump for extended periods to support commissioning of the diagnostics, particularly the arc beam position monitors[10,11] and the beam loss monitors[3].

C. Optical Checks

Optics tuning procedures were developed and tested for the entire beam line from the gun to the dump. Specifically: the north linac FODO cells were tuned to exactly 120°; the spreader dispersion was tuned to the theoretical value of zero; and the phase advance across the extraction region was set to 180°[12].

Operational procedures are being developed for measuring and correcting: the arc momentum compaction factor; high dispersion tuning of the arc to support studies of linac energy variation; and fine tuning of the transverse optics.

The first optical checks using difference orbits were initiated. Data was taken off-line and analysis is currently in progress.

D. Isochronicity Measurement and Correction

The linac energy was modulated by ±0.1% with a square wave applied to the drive of one of the superconducting RF cavities. A precision 1500 MHz phase detector was used to measure the phase difference between a reference signal derived from one of the RF control modules in the linac and a beam signal from a BPM at the 90° point of the arc.

Two optics sets were calculated using DIMAD to give different values of the M_{56} beam transfer matrix element (change of path length with energy). These were used in the arc and measured using this technique. The results are as follows[13].

nominal M_{56} 1.0 m measured M_{56} 1.4 m
nominal M_{56} 0.0 m measured M_{56} 18 cm

Applying small tweaks to the optics corrected the M_{56} of the latter case to:

measured M_{56} 1.8 cm specification 10 cm

The accuracy of the measurement technique is better than 3 mm.

IX. CONCLUSION

A.. Present Strengths

Pre-commissioning of CEBAF has now been underway for more than a year. An experienced commissioning team is in place, with members of the team having prior experience from CERN, DESY, FermiLab, KEK, and SLAC. A trained and qualified team of operators is now in place and used to working together.

The safety procedures are well documented and enforced. Examples of each element of the safety system have been tested with beam and proven procedures exist for testing the expanded system.

The Team approach is now part of the commissioning culture and is accepted by all (this was not initially the case). There are clearly defined and understood goals which incorporate the best ideas of the entire staff. It has been clearly demonstrated that working together produces better results.

B. Long Term Improvements Planned

There are a number of areas where improvements are necessary.

The main limitation to accelerator operation up till now has been the cryogenic system. We expect to commission the cold compressor this summer and demonstrate reliable operation.

The control system, TACL, was also a weakness. Initially, the main problem was system response time and this was successfully rectified by modifying the configuration. The enhancements now foreseen are:

more "canned" procedures on the computer
more, and better, high level screens
higher reliability of the system
better operator interface

We are benefiting from interaction with the FermiLab controls group and may well incorporate some of the functionality of their ACNET control system.

The beam position monitors need improvement to correct problems seen during operation. The arc monitors (which see a single beam) will be modified to improve the signal-to-noise ratio. The cost will be offset by multiplexing monitors from the different arcs. The linac beam position monitors (which see multiple superimposed beams) also need improved front-end electronics which is not completely defined at this time.

X. REFERENCES

[1] F. Dylla. This conference, "Operating Experience with SRF Cavities."

[2] N. S. Sereno and L. S. Cardman. This conference, "Studies of Multipass Beam Breakup and Energy Recovery Using the CEBAF Injector Linac."

[3] J. Perry, et al. This conference, "The CEBAF Beam Loss Sensors."

[4] G. Krafft et al. This conference, "Energy Vernier System for CEBAF."

[5] S. Simrock et al. This conference, "Phasing Schemes for the CEBAF Cavities."

[6] R. Li et al. This conference, "Automated Measurement of Cavity Frequency and Cavity Tuning at CEBAF."

[7] Z. Li et al. This conference, "Transport Properties of the CEBAF Cavity."

[8] L. Merminga et al. This conference, "Operation of the CEBAF Linac with High Beam Loading."

[9] B. Bowling et al. This conference, "Orbit Correction Implementation at CEBAF."

[10] A. Hofler et al. This conference, "Performance of the CEBAF Arc Beam Position Monitors."

[11] B. Bowling et al. This conference, "CEBAF Beam Viewer Imaging Software."

[12] Y. Chao et al. This conference, "Commissioning and Operating Experience with the CEBAF Recirculation Arc Beam Transport System."