CEBAF PR-92-028
August 1992

THE CEBAF INJECTOR RF DISTRIBUTION AND BUNCH-LENGTH MEASUREMENT SYSTEM

R. Abbott, B. Bowling, M. Crofford,
J. Fugitt, C. Hovater, G. Krafft
Continuous Electron Beam Accelerator Facility
12000 Jefferson Avenue
Newport News, VA 23606

CONTINUOUS
ELECTRON
BEAM
ACCELERATOR
FACILITY

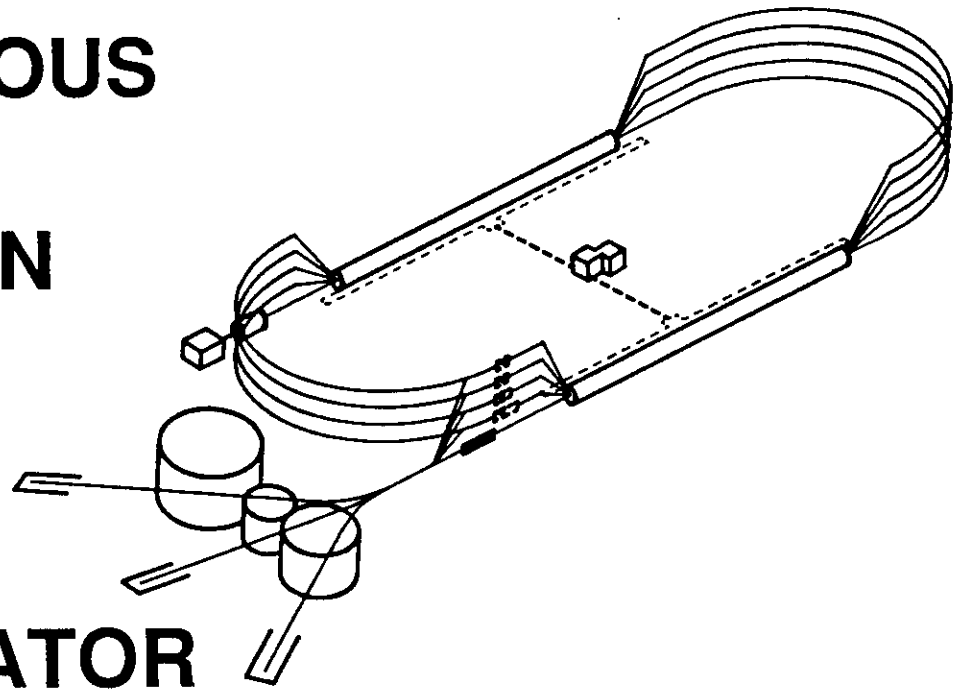

SURA *Southeastern Universities Research Association*

CEBAF
The Continuous Electron Beam Accelerator Facility
Newport News, Virginia

Copies available from:

Library
CEBAF
12000 Jefferson Avenue
Newport News
Virginia 23606

The Southeastern Universities Research Association (SURA) operates the Continuous Electron Beam Accelerator Facility for the United States Department of Energy under contract DE-AC05-84ER40150.

DISCLAIMER

This report was prepared as an account of work sponsored by the United States government. Neither the United States nor the United States Department of Energy, nor any of their employees, makes any warranty, express or implied, or assumes any legal liability or responsibility for the accuracy, completeness, or usefulness of any information, apparatus, product, or process disclosed, or represents that its use would not infringe privately owned rights. Reference herein to any specific commercial product, process, or service by trade name, mark, manufacturer, or otherwise, does not necessarily constitute or imply its endorsement, recommendation, or favoring by the United States government or any agency thereof. The views and opinions of authors expressed herein do not necessarily state or reflect those of the United States government or any agency thereof.

THE CEBAF INJECTOR RF DISTRIBUTION AND BUNCH-LENGTH MEASUREMENT SYSTEM

R. Abbott, B. Bowling, M. Crofford, J. Fugitt, C. Hovater and G. Krafft
Continuous Electron Beam Accelerator Facility
12000 Jefferson Avenue, Newport News, VA 23606 USA

CEBAF
0205 9100 003 765 6

Abstract

The CEBAF injector includes 22 RF control modules which require an intermediate frequency (IF) of 70 MHz and a local oscillator (LO) frequency of 1427 MHz. A STAR network distributes the signals over coaxial cables that are of equal length so that all systems see the same phase drifts due to ambient temperature changes [1]. To obtain the signal levels required by the individual RF control modules, amplifiers are used in both the LO and IF distribution. Temperature-dependent phase drifts associated with the amplifiers are minimized by a phase-lock loop around each amplifier. In addition to the frequency distribution, an automated beam bunch-length measurement is incorporated in the chopper cavities' intermediate frequency. This allows the phase of the chopper cavities to be modulated and bunch-length measurements to be performed on the electron beam downstream.

Introduction

The stability of the RF system in the CEBAF injector has a large effect on the energy spread of the electron beam. Small phase shifts between the injector cavities could make the beam unusable for the end station experiments. A system built around a STAR network can greatly reduce temperature related phase drifts. Each RF control module is the same electrical distance away from the distribution node and thus sees similar temperature related phase drifts. In addition, phase-lock loops are built into each of the injector distribution amplifiers, minimizing phase drifts with the rest of the accelerator RF distribution system. Eventually the STAR distribution system will be compared with an ultra-stable fibre optic reference which is derived from the master oscillator, reducing all drifts in the distribution system to less the 0.5° [2].

A unique feature of the injector RF distribution system is the ability to modulate the phase of the chopping cavities. Modulating the phase of the chopper cavities' reference intermediate frequency (IF) allows the beam bunch length to be determined downstream through the fourth harmonic of the beam-induced RF cavity field [3]. Bunch-length measuring cavities are located after the capture section, after the first two superconducting cavities, and after the first cryomodule. The information obtained from the measurement is important to the beam operator when setting up the individual cavity phases of the injector RF system.

STAR Distribution System

The STAR system diagram is shown in Figure 1. Four generic zones receive an IF of 70 MHz and a LO frequency of 1427 MHz. Upon reaching a given zone the signals are further divided eight ways, to support the eight cavities in a cryomodule. With the exception of the IF signal used for the chopping cavities, the IF and LO distribution systems have only passive elements after the amplifiers. Amplitude drifts are not a serious concern because each RF control module uses a precision voltage reference to keep cavity gradients stable. Phase drifts, while they do not affect the beam in the injector, will hinder the two CEBAF linacs' ability to accelerate the beam. Therefore, it is important to know approximately the phase drift the injector may have with the rest of the accelerator.

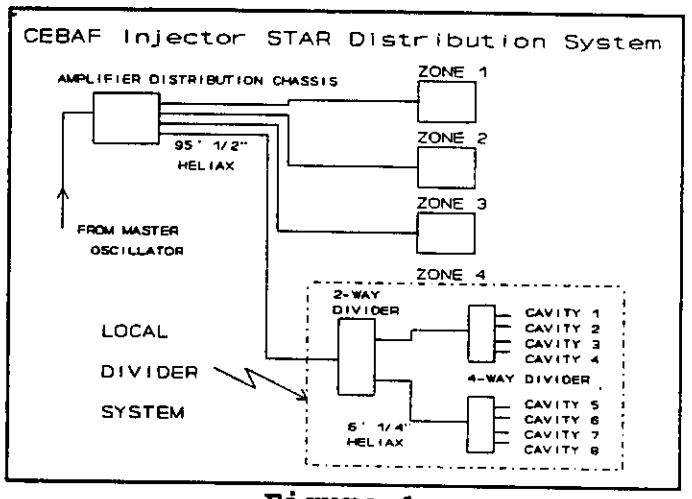

Figure 1

Cable Drifts

The cable phase drifts are directly related to ambient temperature in the injector service building. The service building temperatures can range from a winter low of 18°C to a summer high of 35°C. Using the data supplied by Andrews the cable drifts can be calculated for the seasonal changes [4].

Cable	Max drift @ 1427MHz	Max drift @ 70MHz
95' 1/2" Heliax	7.7°	0.4°
6' 1/4" Heliax	0.6°	0.03°
12" .141 Conformal	0.3°	0.015°
Total for $\Delta T = 17°C$	8.6°	0.445°

During the recent CEBAF Front End Test these changes were never noticed because each cavity saw approximately the same drift. For the upcoming linac tests these drifts will have to be accounted for; otherwise the injector may drift out of phase with the linac.

Two methods have been proposed for minimizing the drifts in the injector STAR. The first measures the average temperature of the Heliax cables and removes the

*Supported by D.O.E. contract #DE-AC05-84ER40150

drifts through feed-forward compensation in each RF control module. The temperature sensor consists of a copper cable placed in parallel with the 95' Heliax cables, *i.e.* in thermal contact. The copper cable is then terminated to a resistance bridge which senses the voltage change due to temperature. Depending on the cable temperature a look-up table then moves each cavity's phase setpoint the appropriate amount to remove the drift.

The second method involves use of an ultra-stable fibre optic [2]. The IF and LO signals would be mixed together at the first chopper cavity and then compared to the reference on the fibre optic. The information then is used to align the injector phase with the rest of the accelerator. Both schemes will be used to minimize the injector phase drifts.

Amplifiers

The CEBAF main drive line supplies the IF and LO signals and connects to an IF and LO amplifier/distribution chassis. Both signals need to be amplified to meet the power requirements at the RF control modules. The LO amplifier uses class C common base Motorola MRA 1417 series transistors. Amplitude is adjusted by attenuating the output stage to approximately 12 W with a 3 dB attenuator; small adjustments are made by tuning the bias voltage on the two transistor stages. The transistors are housed in a water-cooled aluminum chassis to dissipate heat and increase the amplifier lifetime.

The IF amplifier final stage uses a generic class A 2N4427 transistor to generate the 1 W needed to distribute to the RF modules. Amplitude is set by attenuating the input signal level.

To minimize temperature-dependent and warm-up induced phase drifts, each amplifier has a phase-lock loop (PLL) around it. Figure 2 shows a block diagram of an amplifier/distribution chassis with such a PLL. A 20 dB directional coupler on one of the distribution legs samples the amplifier output and compares it to the input reference from the drive line. A standard diode ring mixer is used as a phase detector. A simple OP-amp integrator, using a low-noise OP-27, sets the loop response characteristics. Electronic phase shifters are then used to keep the phase locked. The phase shifters are approximately linear with voltage, up to 10 V, and provide a usable phase range of 120°. With the PLL, phase shifts across the amplifiers have been reduced by an order of magnitude, from 10°–20° to approximately 1°.

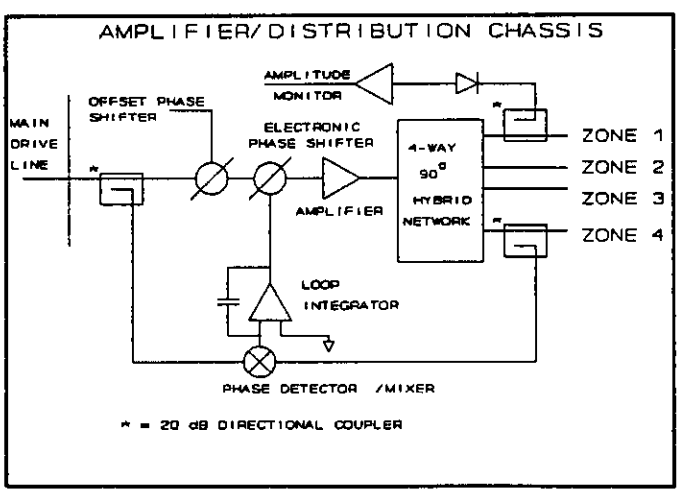

Figure 2

Both the LO and IF chassis are monitored through CAMAC for power output and loss of lock. Fault lights on the master oscillator display screen in the accelerator control room will inform beam operators of the status of the amplifier/distribution chassis at all times.

Bunch-Length Measurement

Theory

The bunch-length measurement method used at CEBAF was first successfully tested by C. G. Yao [3]. The method Yao developed measures the charge distribution along the phase within the bunch by detecting a phase shift of fields induced by the series of sub-bunches in a cavity while sweeping the phase of the chopper system with respect to the rest of the injector. Sub-bunches are obtained by having the normal 60° aperture replaced by a 10° aperture. A block diagram of the measurement is shown in Figure 3.

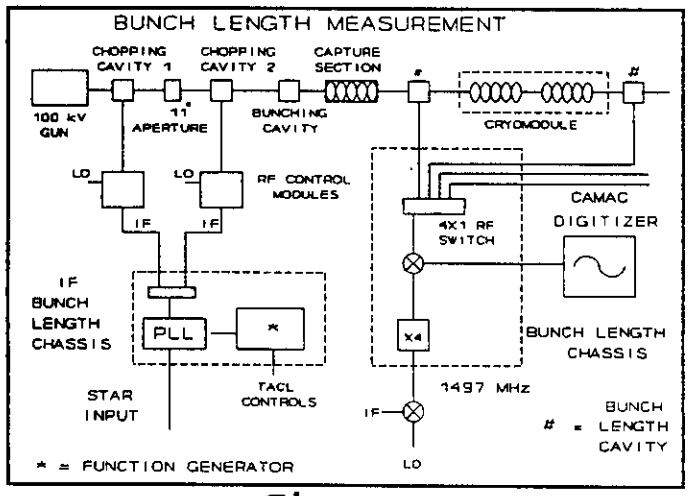

Figure 3

Normally the CW electron beam is reduced to 60° bunches in the following manner. Two identical perpendicular dipole modes in the first chopper cavity deflect the CW electron beam so that it projects a circle. A radial aperture is placed downstream that allows only 60° of the 360° of the deflected beam to pass through. A second cavity then deflects the 60° bunch back on axis when properly phased with the first.

For the bunch-length measurement an 11° aperture is moved into place and the phase of the two chopping cavities is modulated with respect to the rest of the injector. A sawtooth wave form is applied to an electronic phase shifter in the IF reference to the two chopping cavities. The phase can be swept for any of the six sub-bunches that make up the normal 60° bunch. The bunch phase is then measured downstream at different locations along

the injector. A cavity operating at 6 GHz is used to detect the fourth harmonic of the beam-induced fields. The fourth harmonic was chosen because of the higher sensitivity. Originally a stainless steel cavity was developed for the measurement, but it was discovered that CEBAF's 1497 MHz beam position monitors can also be used to detect the fourth harmonic. The beam-induced signal is then compared to a reference signal using a double balanced mixer/phase detector. The output of the mixer is the phase centroid of the sub-bunch with respect to the initial phase. This can easily be seen on an oscilloscope as shown in Figure 4. The bunch length is then determined from the vertical deflection the bunch makes on the oscilloscope.

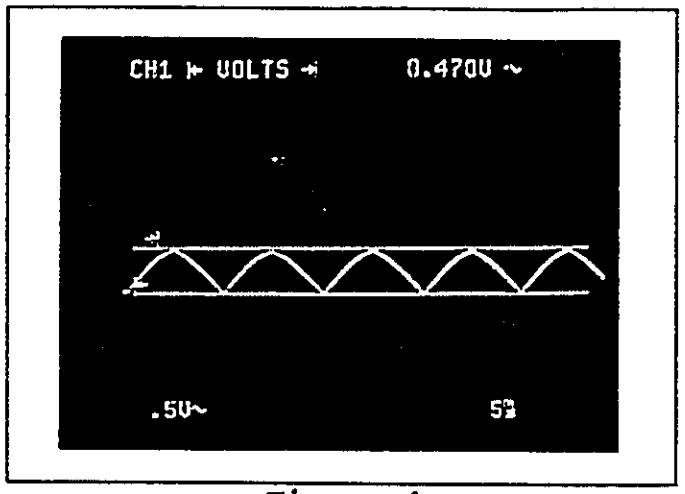

Figure 4

IF Bunch-Length Chassis

In order to keep the concept of the STAR system intact and still independently modulate the two chopping cavities, a PLL similar to that in the amplifier/distribution chassis is built around the electronic phase shifter used to sweep the chopping cavities' phase. The IF signals used to feed other cavities in that zone are divided out before the phase modulator. The phase modulator is referenced to the STAR system to keep it phased locked. To phase modulate a chopper cavity its whole IF reference is phased modulated; this way the individual cavity phase controller does not see the measurement.

Phase modulation is achieved by summing the sawtooth wave form with the error signal at the OP amp/integrator of the PLL. This allows the operator to do the bunch-length measurement after she/he has crested the beam energy without fear of losing phase synchronization of the chopping cavities with the other injector cavities. When not in use, the sawtooth wave generator is disabled and the summing resistor is tied to a virtual ground, thus eliminating any possibility of phase offsets or noise getting on the beam.

An on-board function generator using the EXAR 2206 was chosen for its versatility to develop the sawtooth wave form. It can be frequency and amplitude set externally, which makes it an ideal choice for the system. The function generator has the ability to sweep the phase from 0° to ±45° and set the modulation frequency from 20 Hz to 400 Hz. The function generator output is AC coupled and combined to a voltage reference for precision phase offset adjustments. In addition to the remote capabilities the system can be switched to local control and an external function generator used.

Bunch-Length Chassis

The phase length of the electron bunch is detected in the bunch-length chassis. It uses an RF reference of 1497 MHz, multiplies it by four and then compares it to the fourth harmonic of the beam-induced field from one of the three bunch-length measuring cavities [3]. The phase detector sensitivity is maximized by keeping the input signal phases at a difference of 90°, which is accomplished through an electronic phase shifter. The operator can choose any three of the bunch-length cavities by activating an RF switch inside the chassis. The phase detector output is then filtered and sent to the CAMAC digitizer.

CAMAC/TACL Interface

The CEBAF logic-driven software TACL is used for all control and STAR system interfaces [5]. Analog control for the bunch-length measurement is provided through a Bira 5408 CAMAC 12 bit digital to analog converter. Analog signals of the bunch-length phase and the sawtooth wave are digitally converted through an Aurora 12 digitizer. The controls and the digitizer output are displayed together on one computer screen in the accelerator control room.

Conclusion

The injector STAR has been operating for over a year with only minor problems. The real test for the system will come during the upcoming north linac test when the injector must be phase synchronized with the linac. Yet to come is the master oscillator fibre optic reference that should eliminate almost all phase discrepancies with the linacs. The bunch-length measurement has been taken from a tabletop experiment to an actual diagnostic tool used during beam setup. All of the major components have been installed and tested, except the CAMAC digitizer.

References

[1] J. Fugitt, T. Moore, The CEBAF Superconducting Cavity RF Drive System, Particle Accelerator Conference, 1987.

[2] A. Krycuk, *et al.*, The CEBAF Frequency Distribution System, IEEE Particle Accelerator Conference, 3, p. 1470, May 1991.

[3] C. G. Yao, A New Scheme For Measuring The Length Of Very Short Bunches At CEBAF, Accelerator Instrumentation Conference (Conference Proceedings), September 1990.

[4] Andrews Corporation, Technical Bulletin SP30-14, February 1990.

[5] R. Bork, *et al.*, "CEBAF Control System", in 1988 Linear Accelerator Conference Proceedings (Newport News, VA) pp. 415-17.