CEBAF-PR-92-025

CEBAF: PROJECT STATUS AND FRONT END TEST RESULTS*

Charles K. Sinclair
Continuous Electron Beam Accelerator Facility
12000 Jefferson Avenue
Newport News, VA 23606 USA

CEBAF
0205 9100 004 181 7

Abstract

Construction of the CEBAF five-pass recirculating linear accelerator is in the final stages of installation and subsystem commissioning. First beam to an experimental hall is planned for early 1994. The current project status is briefly reviewed. The front end accelerator, a 45 MeV linac composed of a 5 MeV superconducting injector and two standard CEBAF accelerator cryomodules, each containing eight 5-cell, 1497 MHz superconducting cavities, has been in operation over 3000 hours for commissioning studies. The cavities are operated at an average accelerating gradient of 5 MeV/m. This accelerator has delivered 45 MeV, 200 μA CW beam with both transverse and longitudinal emittances meeting design specifications. CW beam has been recirculated through the two cryomodules to reach a final energy of 80 MeV. Energy recovery at an average accelerating gradient of 5 MeV/m has also been accomplished with CW beam. The recirculation experiment demonstrates that the full CEBAF accelerator will operate well below beam breakup threshold. Detailed results from the front end tests are presented.

Introduction

CEBAF, the Continuous Electron Beam Accelerator Facility, has been under construction since February 1987 in Newport News, Virginia. The accelerator complex, shown schematically in Figure 1, includes a 45 MeV superconducting injector, two 400 MeV superconducting linacs, and a beam transport system which permits up to five recirculation passes through the linacs. The Central Helium Liquifier (CHL) provides 4800 watts of refrigeration at 2 K for the accelerator. A system of RF separators will allow beam from any of the five recirculation passes to be delivered to any of three experimental halls, permitting experiments to be operated simultaneously with different, though correlated, energies in each hall. An initial complement of experimental equipment is included in the project.

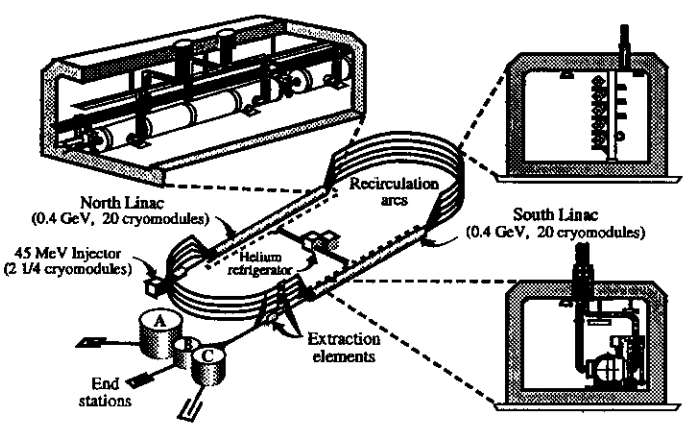

Figure 1. Schematic view of the CEBAF accelerator.

At the present time, the years of design, specification writing, and procurement are rapidly coming to fruition, and the entire laboratory is involved in an intense period of installation, checkout, and commissioning of each of the major subsystems of the accelerator. An aerial view of the accelerator site taken in July, 1992, is shown in Figure 2. Civil construction is virtually complete. The three experimental halls visible will ultimately disappear beneath mounds of earth, which will provide additional radiation shielding.

Figure 2. Aerial view of the CEBAF accelerator site as of July 1992.

The 45 MeV front end accelerator has been in operation with beam for over 3000 hours for a variety of commissioning activities and tests, including a beam recirculation experiment. The first of the two linacs is 60% complete, and is presently being commissioned with beam. During the coming ten months, commissioning work will include high beam current testing of the full north linac, and low

*Supported by D.O.E. contract #DE-AC05-84ER40150

beam power optical studies of the first recirculation arcs. A shutdown to complete the installation of the accelerator is planned for the summer and early autumn of 1993, to be followed by a period of commissioning of the full accelerator. Delivery of single pass beam to the first experimental hall is planned for early in calendar 1994.

In the following sections, the status of each of the major accelerator subsystems will be reviewed, and results from the extensive front end testing will be presented. Future commissioning plans and the energy upgrade potential for the accelerator will also be noted.

Accelerator Systems Status

Accelerating Structures. The heart of the accelerator is a 5-cell, 1497 MHz niobium cavity originally developed at Cornell University. The cavity structures are manufactured by private industry from CEBAF supplied, high RRR niobium. After receipt at CEBAF, these cavities are chemically processed and assembled into cavity pairs. This assembly is done under strict clean room conditions, as illustrated in Figure 3. The cavity pairs are tested in vertical dewars before subsequent assembly into helium vessels and cryostats, forming a cryounit. Four such cryounits are joined together to make a cryomodule, the basic building block of the accelerator. Each linac has twenty cryomodules, and thus 160 cavities. The front end accelerator has another 18 cavities. To date, 281 cavities out of a total 360 cavities ordered have been received from the vendor.

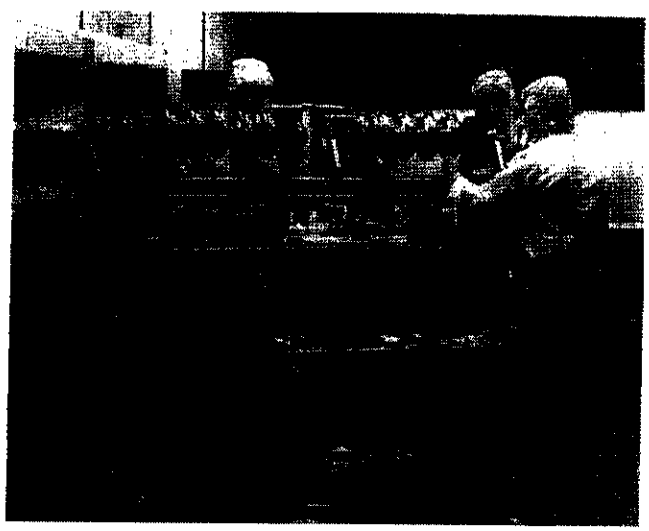

Figure 3. Clean room assembly of a CEBAF cavity pair.

CEBAF has four cryounit assembly lines in operation, each producing one cryounit every two weeks. Finished cryounits feed two cryomodule assembly lines, each producing one cryomodule per month. This net production rate of two cryomodules per month has been maintained for six months, and will continue through completion of the second linac. Twelve cryomodules of the first linac, along with 2-1/4 cryomodules in the front end, are presently installed in the tunnel. At one time, cryomodules were tested as a complete assembly prior to delivery to the accelerator tunnel, but this step has proven unnecessary. Testing of each finished cryomodule is now done in its final location in the accelerator.

The performance of individual cavities routinely exceeds the CEBAF design specifications of 5 MeV/m accelerating gradient at a Q_0 of 2.4×10^9 [1]. Field emission loading is presently the most common performance limiting phenomenon. We define a "useable" gradient as that gradient which is limited by the Q_0 dropping to 2.4×10^9, or by the field emission associated heat load reaching 1 W, or by being within 1 MeV/m of the gradient at which the cavity quenches. The distribution of useable gradients for cavities produced to date extends to 15 MeV/m, and has a mean of 8.6 MeV/m. The mean Q_0 is 5.7×10^9. A very interesting aspect of this fine cavity performance is that no systematic degradation in cavity characteristics is observed between vertical dewar cavity pair tests and tests of completed cryomodules in the accelerator tunnel. Previous experience at other superconducting accelerator installations has been that cavity performance in the final installation is measurably below that obtained during vertical testing.

RF System. Each eight cavity cryomodule receives RF power from an eight klystron high power amplifier (HPA). The 5 kW klystrons are manufactured by Varian, and include a mod anode to permit operation with reduced klystron beam current when lower RF power is required. An 11.6 kV high voltage power supply provides a common klystron beam voltage to each HPA. All HPAs and high voltage power supplies for the complete accelerator are presently installed in the above ground service buildings, along with the waveguides to deliver power to the cryomodules in the tunnel. Delivery of the 350 klystrons ordered is very nearly complete, and most of these are tested and installed in the HPAs.

Each klystron and cavity combination is controlled by an individual RF control module [2]. The control modules also handle all interlock and monitoring functions. The modules contain an on-board microprocessor and math coprocessor, and communicate with the accelerator control system through a CAMAC interface. A local computer handles two cryomodules and HPAs, and communicates with the control room supervisor computers. The final version of the RF control module has been developed through extensive testing with superconducting cavities, both with and without beam, and has been in production for five months. Calibrated control modules are in place through the presently installed accelerator, and are being produced and installed at a rate of ten/week.

The Master Oscillator for the accelerator is located in the Main Control Center, and has recently passed its acceptance test. Output from the MO is distributed to the linacs through two temperature-stabilized drive lines, and throughout the injector by a star system [3]. The drive line installation is complete in the first linac, and nearly so in the second.

RF checkout and commissioning takes places in three stages. A low level checkout is done to verify the perfor-

mance of all interlock and control functions, without operating the klystrons. This is followed by a high power checkout, operating the full HPA into waveguide shorts installed in the accelerator tunnel. Following high power testing, the HPA is connected to its cryomodule for RF commissioning. This step includes an optimization of the parameters for each control module, and a 16-hour duration burn in run at high power. On completion of this stage, the fully operational HPA/cryomodule unit is turned over to the Operations Group for beam operations. Low level checkout is now in the second linac, and high level checkout is in the last of twenty HPAs for the first linac. RF commissioning with cold cryomodules is well underway in the first linac.

Beam Transport. The beam transport system for CEBAF is nearly 4.5 km in total length, and includes over 2200 individual magnets. Presently, about a third of this total beam path is installed, under vacuum, and through final alignment. Magnets, stands, and vacuum chambers for a large fraction of the remaining system are in place and being aligned for vacuum hookup. Final alignment follows vacuum, electrical, and cooling water hookup. The last elements to be installed are those in the momentum spreaders and recombiners at the ends of each linac. The first of these spreaders, at the exit of the first linac, is scheduled for installation in early September.

Magnet power for correctors, quadrupoles, and sextupoles is provided by 32 channel trim power supply systems. Eighty of these systems are now complete, and most are installed in above ground service buildings. All of the major dipoles in each arc are powered in series by high stability 10^{-5} power supplies. After magnetic measurement, the major dipoles are matched in pairs. With this matching, it is possible to maintain the field integral for all of the dipole pairs in any arc to within about $\pm 10^{-4}$ of the mean over the full range of operating current. Testing of the dipole strings is underway, and the high stability supplies for these strings meet their specifications.

Cryogenic Systems. The CEBAF cryogenic systems include a 2 K refrigerator to support superconducting cavity testing and a 1500 W satellite refrigerator for magnets in the experimental halls as well as the 4800 W, 2 K CHL refrigerator for the accelerator. The test refrigerator has been in regular operation for several years, and the satellite refrigerator installation is close to completion. The CHL has been in operation at 4 K for over 8000 hours in support of accelerator commissioning work. Liquid helium at 2 K for the commissioning work to date has been obtained using an auxiliary Kinney pump. In the final system, pumping to reach 2 K from the CHL is done by a series of four cold compressors. These are being commissioned at the present time, and are expected to be fully operational late in the year. The helium supply and return transfer lines are complete in both linacs.

Front End Test Results

The Front End Accelerator. The CEBAF front end accelerator is a 45 MeV superconducting linac which serves as the injector for the accelerator. It is designed to produce a very low emittance, low energy spread beam. The present system begins with a 100 kV thermionic gun with a 2 mm diameter cathode, and a control electrode rather than a grid. Following the gun, a two aperture emittance filter defines a geometric admittance of 3.9×10^{-6} meter-radian. A pair of fundamental frequency bi-mode chopper cavities and an aperture select a nominal 60° bunch from the DC beam, which is subsequently bunched further by a conventional bunching cavity. A five cell graded beta capture section is used to accelerate the beam to 500 keV for injection into the first superconducting cavities, and provides further bunching. A two cavity cryounit accelerates the beam to a nominal 5 MeV. A view of the injector area is shown in Figure 4. Following a long drift section, in which the bunching continues to a minimum length of about 0.5°, the beam enters two standard cryomodules for acceleration to 45 MeV.

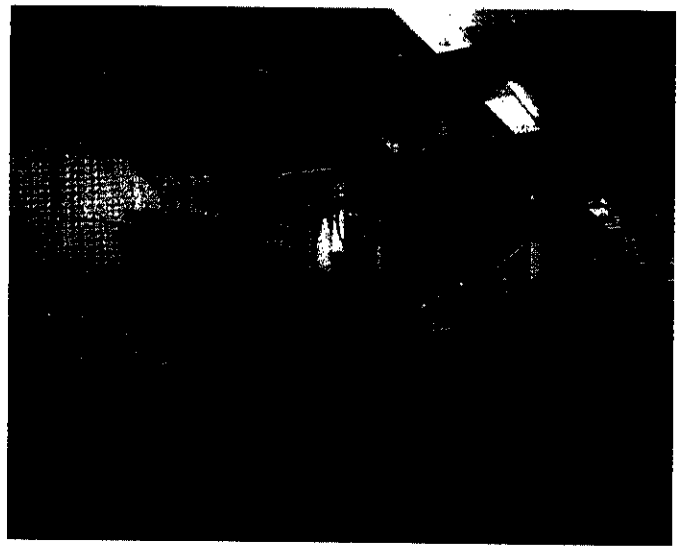

Figure 4. A view of the low energy region of the CEBAF injector.

Future plans call for adding photoemission guns to the injector to provide both polarized electrons and variable duty factor beams. In addition, the fundamental frequency chopper cavities will be replaced with similar cavities operating at the third subharmonic, to permit independent current control over the beam delivered to the three experimental halls.

This front end accelerator has been in operation with beam for commissioning, and a variety of other measurements, for over 3000 hours. Several months of this time has been with around the clock operation for 128 hours/week. The cryogenic cavities have been cycled between room temperature and 2 K several times, with no degradation in performance noted. All beam performance objectives were reached or exceeded, including:

- 45 MeV beam energy,
- 200 μA CW (operation of the 500 keV portion was typically at 340 μA, with higher currents available),

- 4σ transverse geometric emittance in both planes was less than 2×10^{-8} m,
- Bunch lengths less than 0.5° were routinely obtained at the entrance to the first cryomodule,
- The longitudinal ellipse at 45 MeV was shown to be upright, and to have a bunch length less than 0.8°,
- The full momentum spread at 45 MeV was less than 1.2×10^{-4}.

The transverse emittance was determined by measuring the beam profile with a wire scanner as the strength of an upstream quadrupole was varied. Bunch length measurements were made by two techniques. Cavity backphasing and a 3 m dispersion bend were used at 45 MeV, while a technique suggested by Yao [4] was used in the lower energy part of the injector. All of these measured performance numbers are in good agreement with detailed simulations of the front end accelerator.

RF Control Module Performance. The performance of the RF control system was thoroughly explored during the front end test. The specification for gradient noise which is uncorrelated from cavity to cavity is $\sigma < 2 \times 10^{-4}$, and the measured value is $\sigma < 1.5 \times 10^{-4}$. The specification on gradient noise which is correlated between cavities is much tighter, at $\sigma < 1.1 \times 10^{-5}$. Present measurements indicate that we meet this specification at all frequencies except 60 Hz and its harmonics, where our measurements indicate a σ of about 2–3 $\times 10^{-5}$. This latter measurement, in the realities of a 60 Hz world, is very difficult, corresponding to measuring 60 Hz at the level of tens of microvolts. We believe that careful attention to grounding and proper distribution of loads on the ac line will assure we meet the very demanding correlated noise specification. Our specification on fast phase noise is $\sigma < 0.25°$. The control module meets this specification very conservatively, with measurements indicating $\sigma < 0.1°$. Slow phase variations are much less critical, and will be corrected with a vernier system.

Beam Recirculation Experiment. A single pass beam recirculation experiment through the two cryomodules was designed in collaboration with the University of Illinois [5]. The experiment was planned to demonstrate that the full CEBAF accelerator would operate below threshold for recirculating beam breakup, and to provide a Ph.D thesis topic in accelerator physics for an Illinois graduate student. The temporary recirculation loop was constructed with magnets and power supplies from the de-commissioned Illinois accelerator and a number of CEBAF accelerator components. One of the two 180 bends was mounted on a precision translation mechanism, which provided a full RF wavelength of path length control. This 180° bend is shown in Figure 5. A chicane was placed at the exit of the two cryomodules and before the first 180° bend to permit a beam deaccelerated on the second pass to be extracted to a dump, for energy recovery studies. Finally, the recirculation return path contained a six quadrupole FODO array to allow variation of the recirculated beam tune.

Figure 5. The first 180° bend of the recirculation system, mounted on a translation stage.

The majority of the recirculation experiment was run with a 5.6 MeV beam injected into the two cryomodules, accelerated to 42.8 MeV on the first pass, and to 80.0 MeV on the second pass. A 190 μA CW beam was recirculated to 80 MeV without any evidence of beam breakup, as expected. Though no evidence of beam breakup was observed, studies were conducted on the growth of HOM power with beam current as the recirculation optics was varied, using the unpowered last cavity of the second cryomodule as a pickup. These data are presently being analyzed. Energy recovery was also accomplished, deaccelerating the 42.8 MeV beam back to 5.6 MeV. Within the approximately 5×10^{-3} precision of the measurements, 100% energy recovery was observed with a 31 μA CW beam. These measurements indicate that the full five-pass CEBAF accelerator should operate well below the threshold for multipass beam breakup.

Other Measurements. A number of other studies were accomplished during the front end test. The beam position monitors were verified to provide the required 0.1 mm-μA resolution with 100 μsec pulses, for example. A prototype of the novel structure proposed for the RF separators was tested and shown to provide the anticipated high transverse shunt impedance [6]. Pseudo-random modulation of the beam current, which is required to extract beam position information from the five passes present in the linacs, was demonstrated by modulating the RF power to the chopper cavities. The complete front end test provided a good opportunity to begin the development of accelerator operational procedures, and to train beam operators for the coming commissioning activities.

Future Commissioning Plans

The Front End Test was completed on July 2. Immediately following this date, the recirculation experiment was removed, along with the shielding which isolated the test area from the remainder of the accelerator tunnel. The

front end accelerator has now been connected through a beam transport line to the first of the two linacs, which presently contains twelve cryomodules. A moderate resolution spectrometer is located after the last cryomodule, along with a beam dump in the straight ahead position. Shielding has been installed to isolate this region from the remainder of the accelerator tunnel. Testing of this portion of the north linac with beam commenced in mid-August, and is conducted in parallel with continuing RF commissioning and CHL cold compressor commissioning. This commissioning stage is planned to continue until late autumn.

Late in the year, the full north linac will be connected to the spreader and east arc beam transport system. In addition, a tuneup dump, which will permit full power operation of the north linac, will be installed in a straight ahead position after the split-off to the east arc. The east arcs will be terminated with low power (17 kW) dumps, which are adequate for low beam current optical studies through the arcs. Testing of the north linac at full current, and optical studies through the east arcs, is planned to continue until the summer of 1993. At that time, a shutdown of several months' duration will allow for the completion of all remaining accelerator and beam transport installation.

In late calendar 1993, final commissioning of the accelerator will begin with beam transport around the full east arc, through the recombiner, and into the south linac. Beam will be transported to a tuneup dump in a beam switchyard tunnel stub, and later through Hall C, the first of the three experimental halls to come on line. Single pass beam delivery for Hall C equipment commissioning is planned for early in calendar 1994. Accelerator commissioning through full five-pass operation, to a nominal 4 GeV, will continue in parallel with the Hall C activities. Following five-pass operation, the RF separator system will be commissioned to permit beams to be delivered to all three experimental halls. This step is planned to begin in the spring of 1994. Overall, it is an ambitious commissioning schedule for a complex machine.

Energy Upgrade Potential

As noted earlier, the superconducting cavities are significantly exceeding their design accelerating gradients and Q_0's, permitting operation of CEBAF at energies higher than the 4 GeV design value. If the present average cavity characteristics are maintained through the remainder of the accelerator, achieving 6 GeV operation with five passes appears to be quite likely. No magnets in the accelerator suffer from saturation at energies up to 6 GeV, and only minor power supply upgrades would be required to reach this energy.

The accelerator tunnel includes slots for 25 cryomodules in each linac, with only 20 being filled for the initial 4 GeV operation. By filling these additional slots with cryomodules, energies in excess of 8 GeV appear possible. At this energy, some magnet improvements would be required. In addition, it would likely be necessary to either operate the RF system with less than 100% duty factor, or to provide additional helium refrigeration capacity to reach these energies. Above 10 GeV, the recirculation lattice would need extensive rework, and cavity performance above that presently obtained would be required, but the existing tunnel could house a machine in the 15 to 25 GeV range. Overall, it appears highly likely that CEBAF will ultimately reach an energy well above its 4 GeV design value.

Conclusion

The construction of the CEBAF accelerator is well advanced, with completion of all installation work anticipated in autumn of 1993. A lengthy test of the 45 MeV front end accelerator, the injector for the full machine, has been completed. All beam quality specifications for this part of the accelerator were met or bettered, and the RF control system was demonstrated to meet its very demanding specifications. A recirculation experiment in the front end has demonstrated that the full five-pass CEBAF accelerator will operate well below beam breakup threshold. The front end accelerator is now connected to the north linac, and beam commissioning in this expanded system is underway. Over the next few months, commissioning activities will move on to full current beam tests in the north linac, and low current beam optics studies through the east arcs. During summer of 1993, beam operations will shut down to complete all remaining installation work. Commissioning of the complete accelerator will begin in late 1993, with first beam delivery to an experimental hall early in 1994. The performance of the superconducting cavities to date is substantially above their design specifications, leading to the high likelihood that CEBAF will ultimately operate well above its 4 GeV design energy.

References

[1] C. Reece *et al.*, "Performance and Installation Status of Superconducting Cavities at CEBAF", Proc. of the 1992 High Energy Accelerator Conference, Hamburg, Germany (1992), to be published.

[2] S. Simrock, "RF Control System for CEBAF", Proceedings of the 1991 IEEE Particle Accelerator Conference, San Francisco, May 6-9, 1991, p. 2515.

[3] C. Hovater *et al.*, "CEBAF Injector RF Distribution and Bunch Length Measurement System", these proceedings.

[4] C. G. Yao, "A New Scheme for Measuring the Length of Very Short Bunches at CEBAF", CEBAF PR-90-019, October 1990.

[5] W. Barry *et al.*, CEBAF TN-90-231, April 1990; and N. Sereno, CEBAF TN-90-282, January 1991.

[6] R. Kazimi *et al.*, "Test of a New RF Separator Structure for CEBAF", these proceedings.

[7] P. Kneisel and K. Saito, "Superconducting Niobium Cavities with High Gradients", these proceedings.