CEBAF-PR-90-021

CEBAF PROGRESS REPORT

Beverly K. Hartline
Continuous Electron Beam Accelerator Facility
12000 Jefferson Avenue
Newport News, Virginia 23606

CONTINUOUS
ELECTRON
BEAM
ACCELERATOR
FACILITY

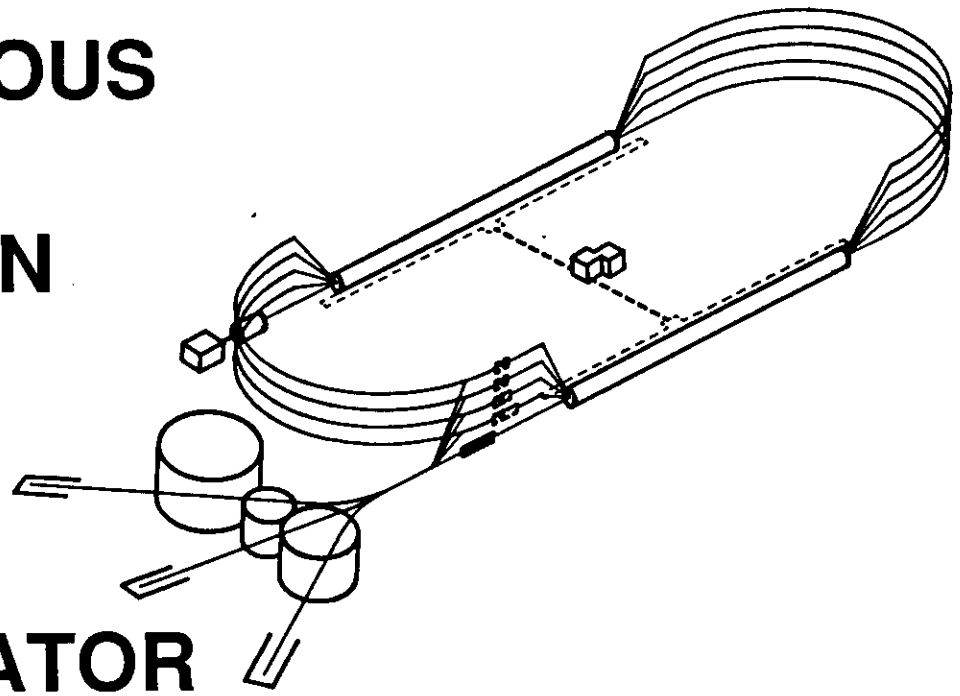

SURA *Southeastern Universities Research Association*

CEBAF
The Continuous Electron Beam Accelerator Facility
Newport News, Virginia

and tunnel construction was completed in June. Construction of associated surface buildings continues, with occupancy expected in November 1990 (Figure 2). CEBAF's 4800-W, 2-K Central Helium Liquefier (CHL) is in the final stages of installation, and commissioning has begun.

Figure 2. CEBAF civil construction progress, July 1990. End station excavation in foreground; accelerator surface buildings in background; injector service building near the center left edge.

Injector

The 5-MeV initial section of the injector has been in operation in the test lab for a year, together with components of the accelerator control system now being permanently installed. The 5-MeV section includes the electron gun, chopping and bunching cavities, a room-temperature capture section that raises the energy to 0.5 MeV, and a pair of superconducting rf cavities identical to those used in the linacs. Operation at 5 MeV has permitted extensive testing of beam diagnostic instrumentation, rf control hardware and software, and operating procedures. This section of the injector achieved a maximum energy of 5.5 MeV (10% above the design value) and a peak cw current of 550 μA (over 2.5 times the design value). Laboratory testing of the 5-MeV section ended on July 31, 1990; the hardware is now being installed in the tunnel and service buildings in preparation for 25-MeV operation (beam accelerated by ten superconducting cavities) late this fall (Figure 3). In the spring an additional accelerating module containing another eight cavities will complete the 45-MeV injector. Using the 45-MeV injector alone, CEBAF plans late next year to conduct a one-pass recirculation experiment to confirm beam breakup analyses, the reinjection scheme, and the capability to detect individual beam positions in a multipass situation. Injector operation and testing are planned to proceed in parallel with linac installation during 1991.

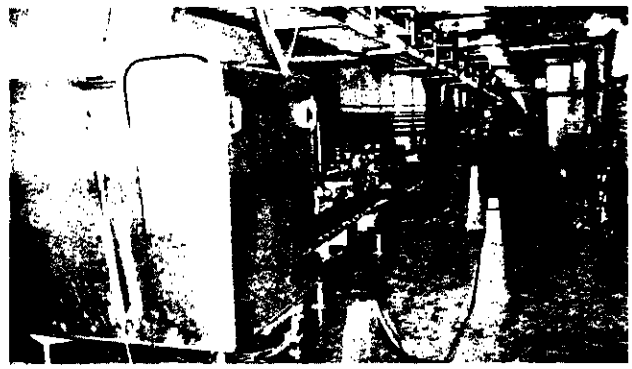

Figure 3. Tunnel installation of initial injector section.

Accelerating Structures

The accelerator's 1497-MHz, five-cell superconducting niobium cavity was originally developed at Cornell University[5] and later adopted for CEBAF. At one end, a waveguide acts as the fundamental rf power input coupler and as a coupler for extracting some of the higher-order modes generated by the beam current; at the other end of the cavity, two waveguides perpendicular to each other and to the beam axis serve as couplers to extract additional higher-order modes. In longitudinal section, the inner surfaces of the cells comprise elliptical segments; this elliptical shape was developed to reduce multipacting, a process that degrades the achievable electric field by leading to excessive heat loss in the cavity wall. The shape also yields good mechanical rigidity and a chemical rinsing geometry advantageous during pre-assembly processing. Table 2 gives key cavity parameters.

Table 2
Cavity Parameters

Fundamental frequency	$f_0 = 1497$ MHz
Shunt impedance	$r/Q = 960\ \Omega/\mathrm{m}$
Loaded Q (@ f_0)	$Q_{ext} = 6.6 \times 10^6 \pm 20\%$
Q_{ext} (HOM)	$10^3 \leq Q_{ext} \leq 10^5$
Operating temperature	2 K
Active length	0.5 m
Performance specifications:	
Accelerating gradient	$E_{acc} \geq 5$ MV/m
Q_0 @ 2 K & 5 MV/m	$Q_0 \geq 2.4 \times 10^9$
(rf losses	≤ 11 W/m)

Cavities are chemically processed and assembled in a clean room into evacuated, hermetically sealed pairs. Each pair is inserted into a liquid-helium cryostat called a cryounit. Four cryounits are serially linked to form the accelerator's basic accelerating module, the cryomodule (Figure 4). Each linac will have 20 cryomodules, connected by warm sections of beam line containing vacuum equipment, beam monitors, and magnets to focus and guide the beam.

By August 1990, 27 production cavities had been delivered as scheduled and six pairs had been prepared for cryounit assembly. In vertical pair tests, cavity maximum

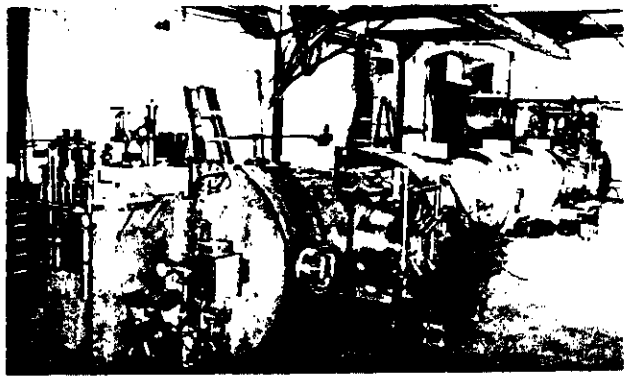

Figure 4. CEBAF cryomodule containing eight cavities for a 20-MeV nominal energy gain.

gradients averaged 9.0 MV/m (180% of spec) and Q_0 averaged 6.5×10^9 (reciprocal average; 270% of spec). The accelerator requires a total of 338 cavities, including the injector's 18.

All cryomodule parts are on contract, first articles have been received, and the first cryomodule has been installed in the tunnel. CEBAF's second cryomodule is being assembled.

RF System

Tailoring the rf system to drive superconducting cavities imposes some unusual requirements. To allow each cavity to operate at its own optimum accelerating gradient, we have implemented an individual rf amplifier and feedback chain for each cavity. The high loaded Q means that the bandwidth of the cavity is very narrow (227 Hz). Since the cavities are equipped only with slow (hours to days) mechanical tuners, the rf system has to assume the burden to correct phase and amplitude to compensate for microphonics, ponderomotive forces, and beam current fluctuations. Table 3 shows the allowable error tolerance in the rf control system.

Table 3
RF Amplitude and Phase Stability Requirements

Uncorrelated errors	
Amplitude	$\Delta V/V \leq 4.5 \times 10^{-4}$
Phase	$\Delta\phi \leq 1°$
Correlated errors	
Amplitude	$\Delta V/V \leq 2.2 \times 10^{-5}$
Phase	$\Delta\phi \leq 0.25°$

During 5-MeV operation, the rf control system achieved amplitude control $\Delta V/V \sim 10^{-4}$ and phase control $\Delta\phi \sim 0.1°$, despite microphonic amplitudes a factor of three worse than those expected in the tunnel. Moreover, it successfully regulated cavity accelerating gradients at several selected values between 0.1 MV/m and 6.8 MV/m, the maximum gradient of the cavities involved.

Instrumentation and Control

The CEBAF control computer system is a distributed system of supermini and supermicro computers which operate in a two-level hierarchy. The seven supervisory-level computers each can control and monitor a subsystem of up to 20 local-level computers. Local area networks and computer-automated measurement and control (CAMAC) interfaces enable intelligence to be extensively distributed for automated control capability at the local level. This control system provides an efficient operator interface to implement set points and to monitor and analyze status for about 30,000 input/output data points (Figure 5).

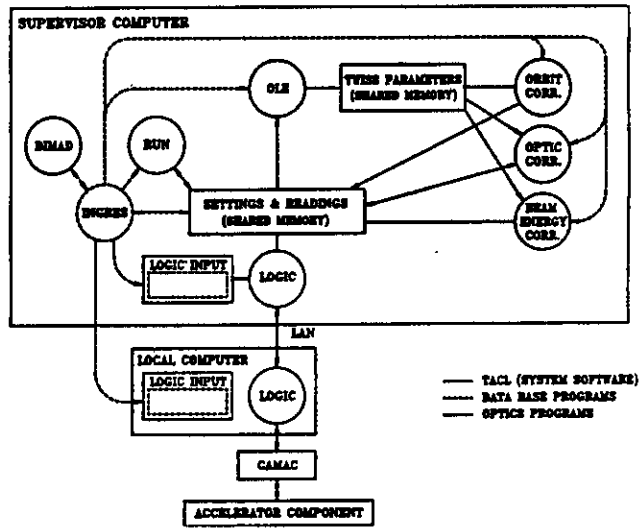

Figure 5. Accelerator control and modeling system schematic.

CEBAF has developed control system software[6] that allows control algorithms and application software to be developed efficiently by operators and physicists without extensive specialized programming skills. Control databases and displays can be modified without requesting custom software updates. The system software is complete and has been in use at CEBAF and other labs for as long as two years. Several optics and application programs have been developed. Hardware installation is underway, with about two-thirds of the computer, networking, and CAMAC equipment on site.

Among the important monitoring systems feeding the control system are the ~800 beam monitoring instruments, such as beam position monitors (BPMs), current monitors, profile monitors, viewscreens, and devices to measure energy and polarization. The workhorse units are the BPMs: a 1.5-GHz system picks up on the fundamental rf frequency, and a 100-MHz system is sensitive to a modulation imposed on the beam for a time period less than the beam recirculation time (4.3 μs). This latter system allows the positions of the beams from each pass to be monitored independently in the linacs. Beam instrumentation is in production and first articles are being installed in the injector.

Safety systems include (1) a hardwired fast-shutdown system that shuts down the injector within 20 μsec of detecting beam loss or selected other faults; (2) a fully redundant PLC-based personnel safety system; and (3) numerous hardware-protection warnings and interlocks implemented in software or hardware. Safety system installation for the injector is approaching completion.

Beam Transport

Beam transport is accomplished using a FODO lattice in the linacs and in modified form in the arcs. In the linacs, the half-cell length is 9.6 m; each half-cell contains one eight-cavity cryomodule (Figure 6). Either a focusing or a defocusing quadrupole, along with beam diagnostics and correction dipoles, is located in each 1.35-m warm region between cryomodules. In the arcs, the modified FODO lattice contains eight quadrupoles in each 63-m (45°) superperiod, and the transport channels are both achromatic and isochronous. Lattice functions have been designed to minimize emittance dilution due to synchrotron radiation effects. Bend magnets have low fields (maximum ~6 kG). Path-length correction to maintain correct phase for all of the different-energy beams is accomplished by "dog legs" in the arcs. Altogether some 2000 magnets are included in the lattice. These magnets are driven by power supplies regulated at 10^{-4} (typically); a few units require 10^{-5}.

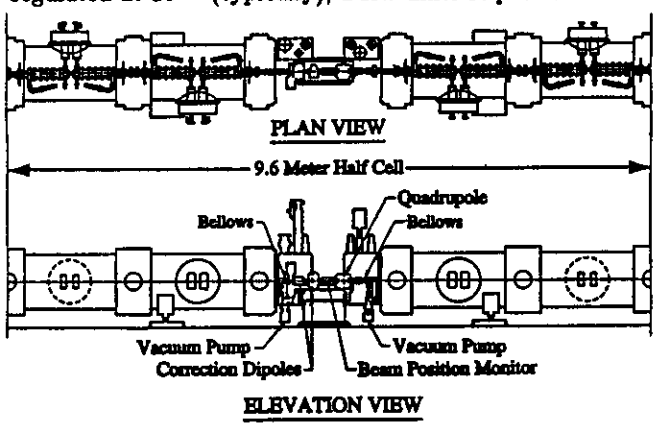

Figure 6. Linac half cell.

Contracts have been placed for the injector magnets, major bend magnets, and power supplies. Other beam transport elements are in various stages of the procurement process.

Cryogenics

CEBAF's 4800-W, 2-K Central Helium Liquefier (CHL) is located geographically in the center of the accelerator racetrack. An H-shaped distribution system feeds liquid helium and shield gas to the string of cryomodules in each linac. Within the linacs, cryomodules are supplied in parallel with liquid helium at 2.2K (2.8 atm), which is expanded through Joule/Thompson valves to reach 2.0 K inside the helium vessels in each cryomodule. The helium is returned to the CHL as gas at 2.0 K (0.031 atm). Helium gas at 40 to 50 K is distributed using the same transfer lines to cool the thermal shields. The CHL is 98% complete and being commissioned. Transfer lines are 49% fabricated and 31% installed. The CHL will be used when we begin injector commissioning in the tunnel late this fall.

Beam Delivery

The multi-user beam delivery system allows each of three experimental halls to receive beams of the desired current at different (but correlated) energies. The system has two key elements: the injector and the rf separators (deflecting cavities) in the extraction line. The injector creates three interspersed bunch trains, $k + 3N, k = 0, 1, 2$, and $N = 0, 1, 2, 3...$, where bunches with different k can have different bunch charges, i.e., currents. An rf separator in each of the west arc beam lines and in the highest-energy, fifth-pass beam line deflects the beam, optics amplify the initial deflection, and septum magnets extract beam for simultaneous delivery to all three end stations. At an operating frequency of ~1000 MHz for the rf separator and ~1500 MHz for the rf system, the separator phases are independent of N and amount to ϕ_0, $\phi_0 + 240°$, and $\phi_0 + 120°$ for bunch trains $k = 0$, 1, and 2 respectively. Of particular usefulness are the initial phases $\phi_0 = 0$, leading to 0°, 240°, 120° resulting in a straight-left-right distribution (e.g., for distributing beams of equal energy to three end stations), and, for a two-beam split, $\phi_0 = 90°$, leading to 90°, 330°, 210° resulting in extraction of one beam and further recirculation of two.

Nuclear Physics Program Preparations

After endorsements from CEBAF's Program Advisory Committee (PAC) and from the DOE/NSF Nuclear Science Advisory Committee (NSAC), which met at CEBAF June 4, 1990, DOE approved CEBAF's experimental equipment plan[7] in late June. The plan includes roughly $75 million in spectrometers, detectors, and data acquisition systems matched to experiment proposals from the nuclear physics community. After reviewing 47 proposals from 253 physicists at 64 institutions requesting 47,000 hours of beam time, the PAC has recommended approval for 16 proposals, conditional approval for 13 additional proposals, and initial allocation of 8040 hours.

Two 4-GeV/c high-resolution (10^{-4}) QQDQ magnetic spectrometers in Hall A (diameter = 53 m) are planned for high-resolution charged-particle coincidence studies (Figure 7a). The spectrometer design calls for superconducting, $\cos 2\theta$ quadrupoles. A request for proposals has been issued for fabrication of the superconducting dipole magnet.

The CEBAF large-acceptance spectrometer (CLAS), based on a toroidal magnetic field ($\int B \cdot dl \sim 2.5$ T-m) produced by six superconducting coils, will provide multiparticle detection capability in Hall B (diameter = 30 m) (Figure 7b). Bids for CLAS torus construction were received in July 1990, and award is expected by December.

Hall C (diameter = 45 m), a multipurpose area for specialized apparatus, will have a moderate-resolution high-momentum (6 GeV/c) QQQD electron spectrometer (HMS) (Figure 7c) supplemented by other detection systems, including a short-orbit spectrometer for decaying particles (e.g., pions and kaons). The request for proposals has been issued for the HMS superconducting dipole and for the spectrometer's support carriage. The HMS superconducting design calls for superconducting cold-iron quadrupoles.

The three large end stations are partially underground, domed concrete structures. End station excavation is nearly complete (Figure 2), foundation work has begun, and some 60% of the 235 meters of beam switchyard and beam transport tunnels—connecting the racetrack accelerator tunnel with the end stations—are complete.

The experimental equipment is planned to be installed starting in late 1992, when end station construction is complete, and to be available in phases for physics research beginning in early 1994, when the Hall C HMS is to be ready for beam.

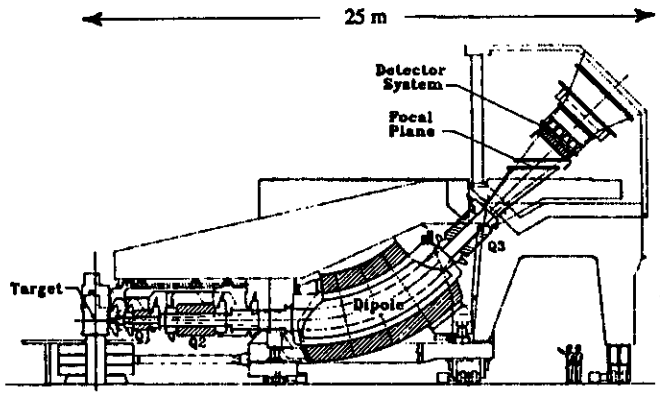

(a) Hall A

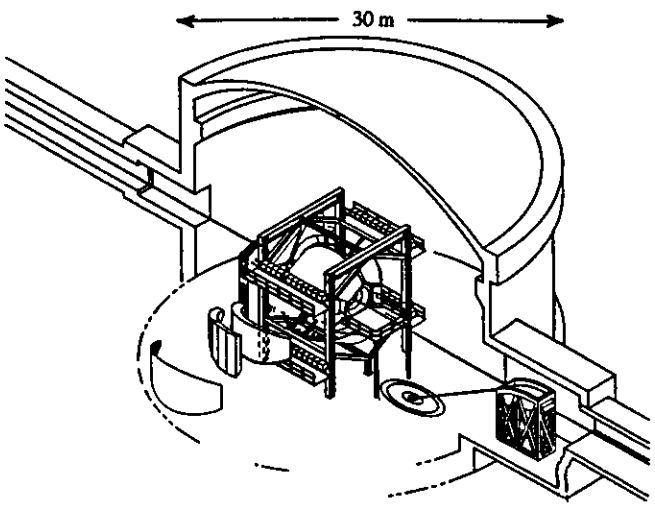

(b) Hall B

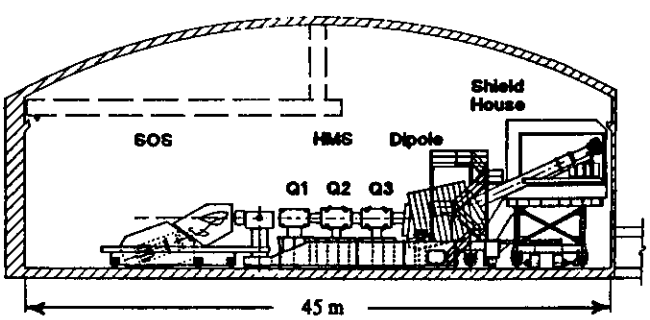

(c) Hall C

Figure 7. Experimental equipment.
(a) 4-GeV/c high-resolution spectrometer for Hall A. (b) CEBAF large-acceptance spectrometer (CLAS) for Hall B. (c) Moderate-resolution high-momentum spectrometer and short-orbit spectrometer for Hall C.

Summary and Outlook

With most major components fully designed and on order from industry, CEBAF's attention has turned to installation and commissioning. Figure 8 shows completed and upcoming milestones. Recent highlights include successful 5-MeV operation and the start of production-scale cavity pair and cryomodule assembly. Running the central helium liquefier, accelerating beam to 25 MeV in the injector, and placing orders for detector components are our major near-term goals.

The construction project is scheduled to be complete in summer 1993, and six months of commissioning are planned in preparation for the start of physics operation in midwinter 1994.

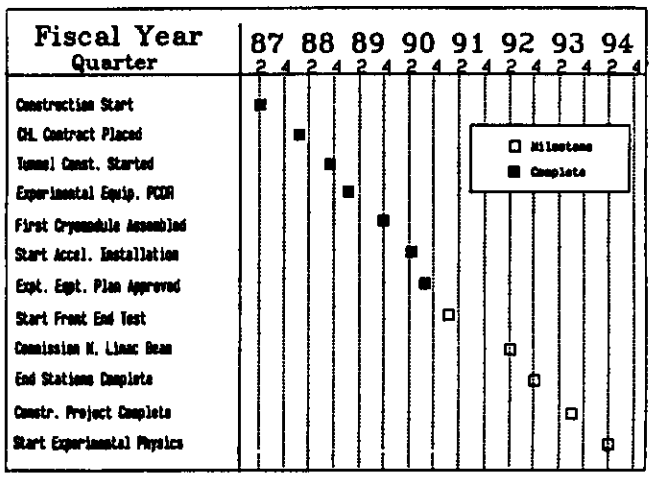

Figure 8. Major milestones.

References

1. *Long Range Plan for Nuclear Science*, DOE/NSF Nuclear Science Advisory Committee (NSAC), 1979.
2. *Long Range Plan for Nuclear Science*, DOE/NSF Nuclear Science Advisory Committee (NSAC), 1983.
3. *Nuclei, Nucleons, Quarks: Nuclear Science in the 1990s*, DOE/NSF Nuclear Science Advisory Committee (NSAC), 1989.
4. H. Grunder, "The Continuous Electron Beam Accelerator Facility," *1988 Linear Accelerator Conference Proceedings*, 3–8.
5. R. M. Sundelin, "High-Gradient Superconducting Cavities for Storage Rings," *IEEE Trans. Nucl. Sci.* **NS-32** (1985), 3570-3573.
6. R. Bork *et al.*, "CEBAF Control System," *1988 Linear Accelerator Conference Proceedings*; E. Navarro *et al.*, "Use of the TACL System at CEBAF for Control of the Cryogenic Test Facility," *Proceedings of the IEEE Real-Time System Symposium*, May 1989.
7. *Conceptual Design Report, Basic Experimental Equipment*, CEBAF, April 1990.