CEBAF PR-89-028

THERMIONIC GUN CONTROL SYSTEM FOR THE CEBAF INJECTOR

R. Pico, B. Diamond, J. Fugitt, and R. Bork
Continuous Electron Beam Accelerator Facility
12000 Jefferson Avenue
Newport News, VA 23606

CONTINUOUS
ELECTRON
BEAM
ACCELERATOR
FACILITY

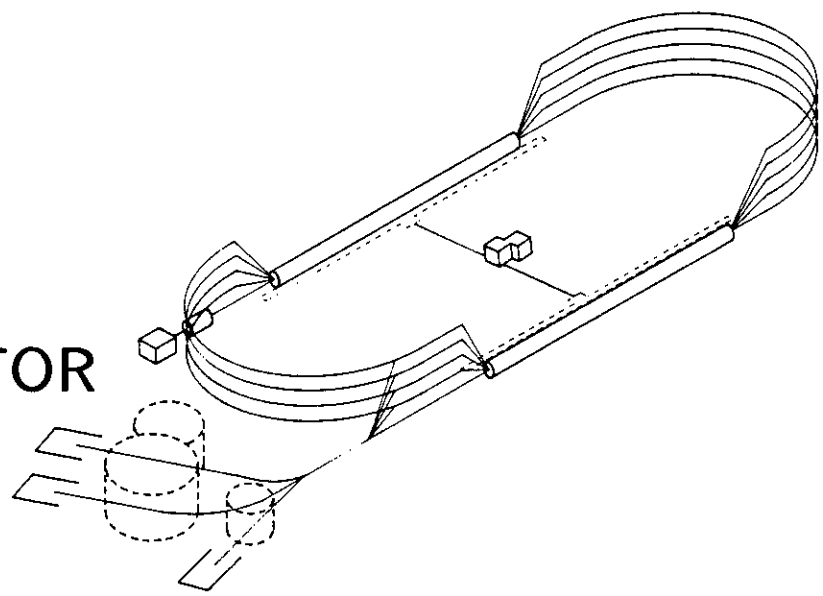

SURA SOUTHEASTERN UNIVERSITIES RESEARCH ASSOCIATION

CEBAF

Newport News, Virginia

THERMIONIC GUN CONTROL SYSTEM FOR THE CEBAF INJECTOR*

Randolph Pico, Bill Diamond, Jock Fugitt, and Rolf Bork
Continuous Electron Beam Accelerator Facility
12000 Jefferson Avenue, Newport News, Virginia 23606

Abstract

The injector for the CEBAF accelerator must produce a high-quality electron beam to meet the overall accelerator specifications. A Hermosa electron gun with a 2 mm-diameter cathode and a control aperture has been chosen as the electron source. This must be controlled over a wide range of operating conditions to meet the beam specifications and to provide flexibility for accelerator commissioning. The gun is controlled using Computer Automated Measurement and Control (CAMAC IEEE-583) technology. The system employs the CAMAC-based control architecture developed at CEBAF. The control system has been tested, and early operating data on the electron gun and the injector beam transport system has been obtained. This system also allows gun parameters to be stored at the operator location, without paralyzing operation. This paper describes the use of this computer system in the control of the CEBAF electron gun.

Introduction

The CEBAF cw superconducting linac contains two 0.4 GeV linacs connected by recirculator arcs. The electron beam is recirculated five times to a final energy of 4 GeV. At the design current of 200μA, the beam power is 800 kW. It is therefore important to be able to control the electron beam parameters over a wide dynamic range for commissioning work and for a variety of different beam conditions needed by the experimental users. The control system for the electron gun and the injector centerline is one of the systems used to achieve this flexibility.

100 keV Electron Gun

The CEBAF injector is currently using a Hermosa Electron Gun. A photograph of the gun is shown in Figure 1, and the specifications are outlined in Table 1.

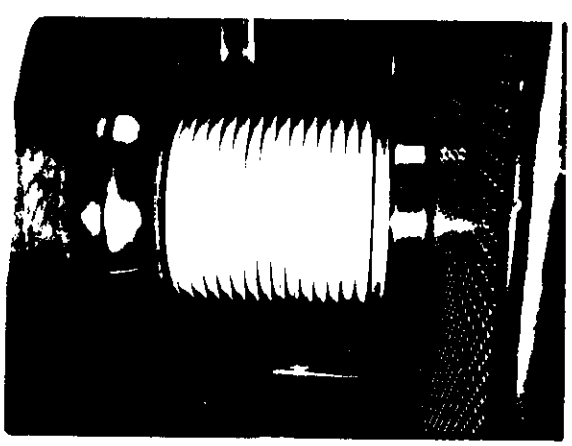

Figure 1 Photograph of the Electron Gun Installed in the High Voltage Deck

Table 1

Nominal voltage:	−100 kV
Emittance at 2 mA:	1 mm-mrad
Cathode:	2 mm dia. dispenser
Nominal current:	2.0 mA
Control voltage:	−70 to +400 V_{dc}
Pulse width:	1/2 μsec to cw
Rise time:	< 50 nsec

The electron beam current from the gun can be controlled using either the filament temperature or the control electrode voltage. Filament temperature control is a slow (seconds to hours) control system and is generally used to set the approximate operating conditions. It is then part of a feedback system to maintain the average gun output current with time constants of hours. The control electrode is a 2 mm aperture used as a control grid for the gun. It can be used to control the beam current with very fast time constants (as short as a few nanoseconds). Although the CEBAF linac is a cw accelerator, there will be many occasions, especially during commissioning, when low duty factor operation will be required. This will be produced by a highly flexible grid pulser that will control the duty factor of the electron gun from 10^{-5} to unity, by controlling either the pulse width or the pulse repetition rate. These are mounted on the high voltage deck that provides the −100 kV operating potential of the electron gun. To produce the final beam design parameters we need to have precise control of the operation of this hardware.

Control System Hardware

The CEBAF instrumentation and control group recommended utilizing IEEE Standard 583-1983 Computer Automated Measurement and Control (CAMAC); IEEE Standard 488-1978, Digital Interface for Programmable Instrumentation (GPIB General Purpose Interface Bus); and a Hewlett Packard fiber optic GPIB bus extender. The group provided the Hewlett Packard series 300/500 technical workstations and the software. Standard interface cards, available through many vendors, complete the system.

The gun hardware must be operated at the same −100 kV potential that is used for the electron gun. Figure 2 shows a photograph of the grid driver, filament power supply, bias supplies and CAMAC crate mounted in the high voltage deck. Also visible at the top of the photo are the high voltage leads. The electron gun and the high voltage deck were designed to operate at potentials beyond −150 kV. The large safety margin reduces the chances of electrical breakdown that might damage the electronics on the deck. A current of 120 V_{ac} is provided from a 200 kV isolation transformer.

* This work was supported by the U.S. Department of Energy under contract DE-AC05-84ER40150.

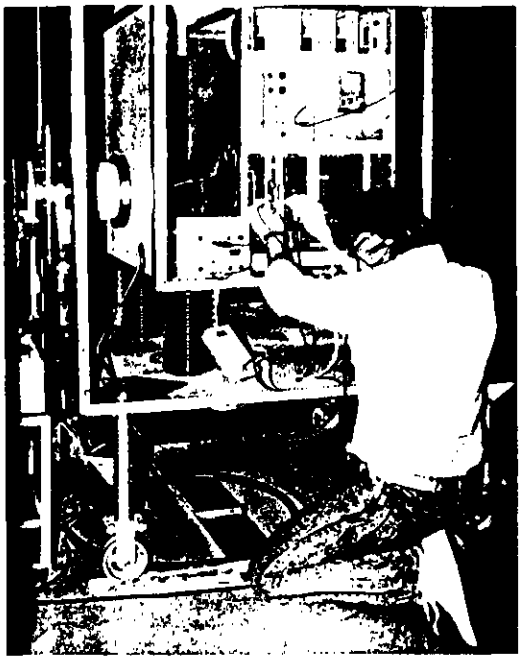

Figure 2 High Voltage Deck

Figure 3 shows a block diagram of the system. The electron gun and the control hardware at high voltage are inside the dashed lines. The filament supply is controlled with a 12-bit D/A that provides a good match to the 10^{-4} regulation of the supply. Control of this supply will be outlined in the next section. The grid driver shown in this figure is a temporary system that will be used while the permanent system is under development. The present system uses a hex-fet driver that pulses the voltage from the -70 V_{dc} bias supply up to the $+400$ V_{dc} bias supply. The negative supply biases off the electron gun, and is a fixed supply. The positive supply can be set via the CAMAC controller with 12-bit resolution. The input to the grid driver is presently provided from a function generator mounted in the control area. It communicates with the grid driver via Fiberlink transmitter and receiver modules mounted at ground and on the high voltage deck. This permits the flexible pulse trains that the function generator can provide to be produced from the grid driver, subject to the frequency limitations of the Fiberlink system. This system is independent of CAMAC. The final pulser will have many of these features but will be completely controlled via CAMAC. The pulser is part of a grid drive circuit that has several other important functions.

Most anticipated operation of the accelerator is with a continuous duty electron beam, and in this mode the grid driver must provide a very stable DC voltage to the grid. A third important function of the grid driver is related to accelerator safety. Electron current is produced by the cathode for positive grid voltage and is completely turned off by a bias of -70 V_{dc}. The grid driver must incorporate the capability to shut down the injector in < 10 microseconds via monitoring throughout the CEBAF accelerator. This system is referred to as the injector fast shutdown (IFS). These requirements will also be met using the standard CAMAC architecture.

Present CAMAC hardware is standard, off-the-shelf equipment available from several vendors. Currently we are using analog-to-digital converters, digital-to-analog converters, a signal conditioner, status monitoring, an output relay register, dataway display, and a GPIB crate controller. The tie from the computer to the CAMAC crate controller is via GPIB brought to the high voltage potential through the use of a fiber optic bus extender.

Software

The CEBAF instrumentation and controls group provided the injector with the supervisor and local workstations. The CEBAF control system architecture is detailed in a previous report[1]. The injector application currently is available as a

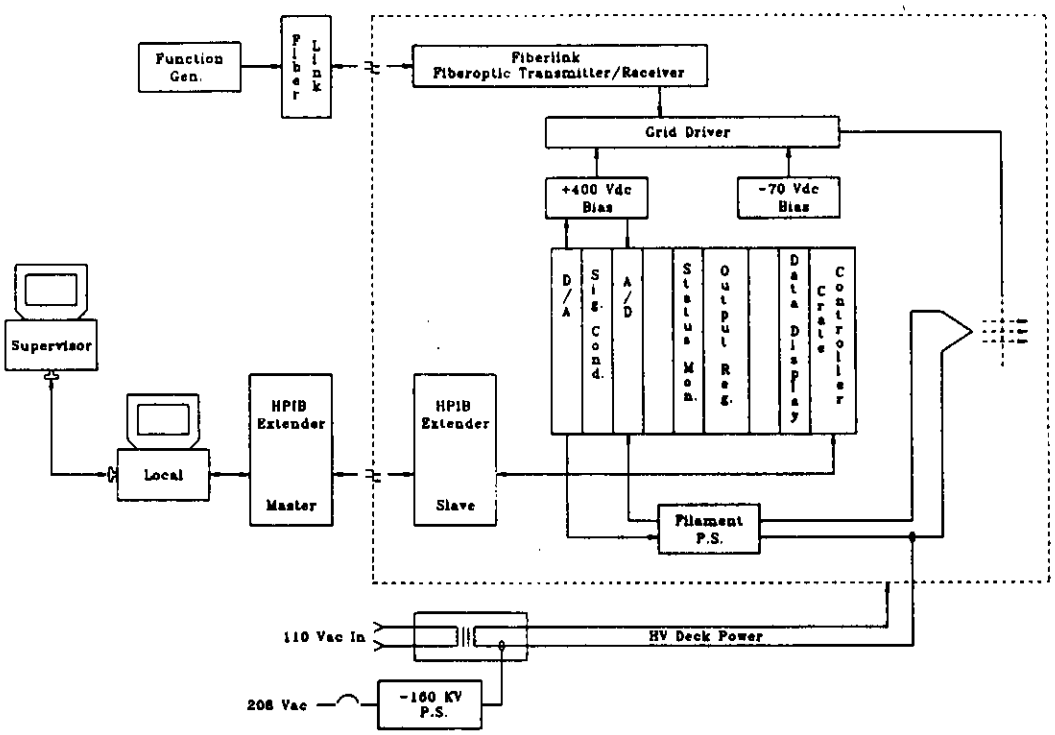

Figure 3 Thermionic Gun Control System Block Diagram

model workstation for the CEBAF accelerator. The distributed architecture shown in Figure 4 allows two levels of controls. The local stations comprise the first level; the second level is handled by the supervisor. Several local workstations controlling different parameters can be connected to one supervisor. Two are shown in the example of Figure 4.

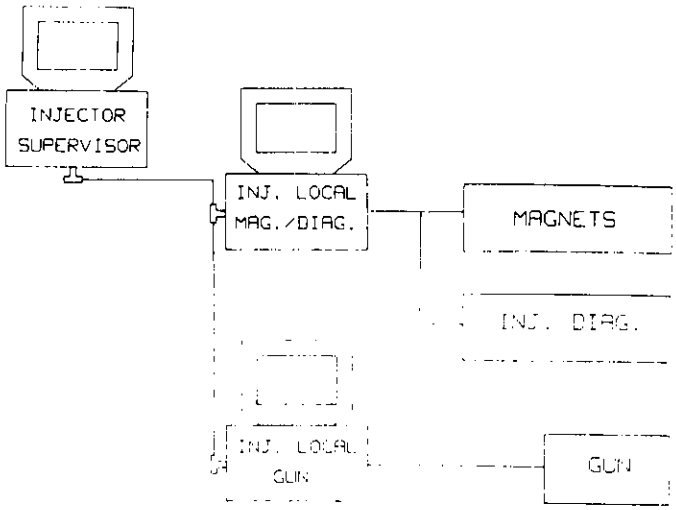

Figure 4 Injector Distributed Architecture

A logic-based control application development software (LCADS) package is presently under development at CEBAF for the control of machine operations. LCADS is designed as a method to build custom control applications software for a hierarchical, distributed process control system. It is based on a ladder-logic type configuration, with a series of editors for relational database generation. Once developed this will be employed by run-time programs, which perform the actual control of the system. The LCADS system was designed as a programming method and control system without using a programming language. The system is a reusable, object-oriented software package, rather than a custom-built system for a particular control application. It is a graphical display-orientated system by which algorithms and I/O functions are defined through the selection of menu items. Architecture and control structures can be "described" by the operator to the computer, which builds a database and necessary relations such that it can automatically control the system. A functional block diagram of the software is shown in Figure 5.

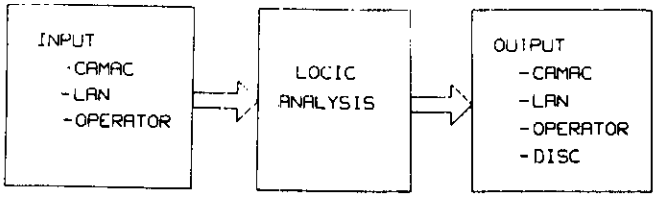

Figure 5 Functional Block Diagram of Software

In its simplest form the control program, when running, performs a three-step process. The first block shown is input, which is data brought in from CAMAC, from data storage units, other computers, or from an operator. This data is then operated on by what is called a logic analysis section. This section contains the control algorithms and other data manipulations necessary to operate the equipment to be controlled. Finally, the necessary data is moved to the output section. Various editors and runtime programs are then required to perform interface points to the work outside of the computer, such as CAMAC equipment and other computers. It is this portion that allows operators to save electron gun parameters (history) on disc. Once developed this data is stored in a system file, and the display editor is created. The first operator display editor formed and used for the injector electron gun control is shown in Figure 6. This editor builds relations between the database and the display for data presentation and data entry by operators when the system is running. Multiple display pages were not demanded for the operation of the electron gun's parameters, although at the supervisor level several pages were necessary. The supervisor control level allows access to vary all thermionic gun parameters. It can also provide such features as current or voltage limits on any parameter set.

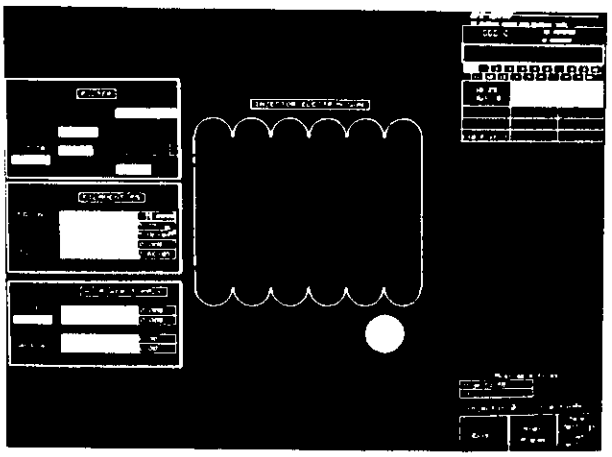

Figure 6 Local Display Screen

Summary

The injector control system is developing rapidly. The electron gun, computer equipment, CAMAC system equipment, fiber optic telemetry, floating high voltage deck, high voltage power supply, and grid driver have been in use since early August with no significant operations down time[2]. The software and hardware that have been described in this paper are in routine use. It has also been used to control the magnet power supplies that power the centerline optical elements. Data such as emittance, beam position, and beam current can also be acquired at the supervisor control level.

The injector will undergo several stages of growth in its control system. The next will occur when the injector is relocated to a test facility that will allow further testing to meet the final beam parameters of the accelerator.

Acknowledgements

The authors wish to express their thanks for the contributions of G. Arnold, R. Dawes, F. Humphrey, and W. Linn, who did a fine job of implementing installation and operation of the injector electron gun controls.

References

1. R. Bork, "The CEBAF Control System Architecture," the proceedings of the 1987 Particle Accelerator Conference, p. 523.
2. W. Diamond and R. Pico, "Status of the CEBAF Injector," this conference.