CEBAF PR-89-026

RF CONTROL SYSTEM DEVELOPMENT AT CEBAF

S. Simrock, C. Hovater, S. Jones, J. Fugitt
Continuous Electron Beam Accelerator Facility
12000 Jefferson Avenue
Newport News, VA 23606

CONTINUOUS

ELECTRON

BEAM

ACCELERATOR

FACILITY

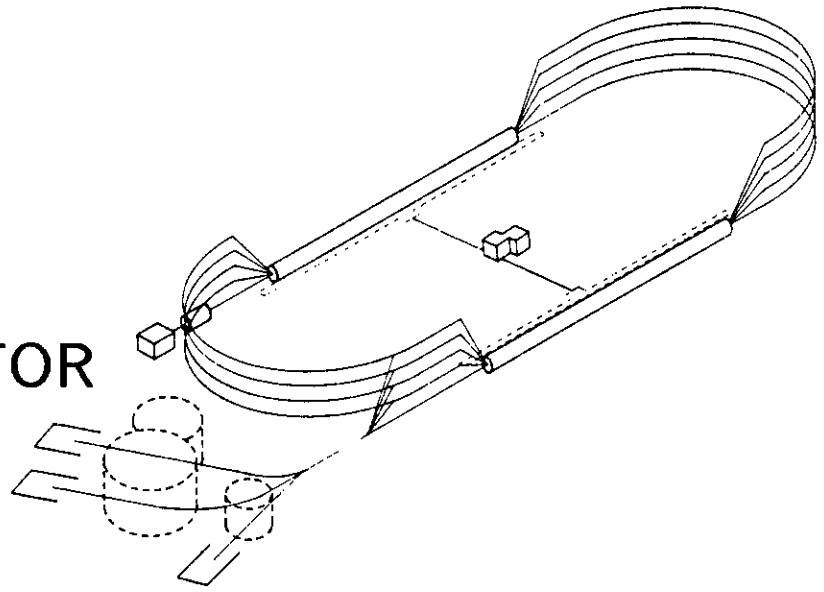

SURA SOUTHEASTERN UNIVERSITIES RESEARCH ASSOCIATION

CEBAF

Newport News, Virginia

RF Control System Development at CEBAF *

S. Simrock, C. Hovater, S. Jones, J. Fugitt
Continuous Electron Beam Accelerator Facility
12000 Jefferson Avenue
Newport News, Virginia 23606

Abstract

The CEBAF RF control system uses a heterodyne scheme to convert the cavity frequency of 1497 MHz down to a more manageable IF frequency of 70 MHz. At this IF frequency all the signal processing is done. Because of the tight system requirements of $\pm 0.2°$ phase stability and $\pm 2 \cdot 10^{-5}$ amplitude stability, CEBAF uses new technologies such as high speed analog circuits at 70 MHz. Major themes include components for signal processing in the control system and recent system performance tests.

Design of the Control Module

The CEBAF control module is divided into four separate sections :

- an RF converter board which transforms the cavity probe signal to an intermediate frequency
- a signal processing card with detectors and controllers for amplitude and phase
- an analog board containing adjustable gain stages for amplitude and phase control
- an intelligent digital controller which communicates with the local control computer.

A schematic diagram of one of the RF control channels described elsewhere [1] is shown in Figure 1. A SPICE based model is used to optimize the characteristics of the feedback loops for lowest residual errors under different operational conditions, for example, varying beam load and slightly detuned cavities. Recently, during a test of the cryomodule, we had the opportunity to test a prototype version of the control module. Results of these tests are described later in this report.

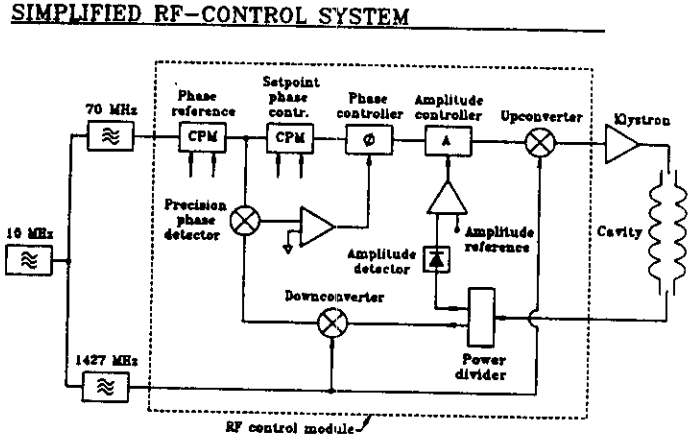

Figure 1. Schematic diagram of the CEBAF RF control system.

RF Converter Board

The RF converter consists of three down-converting channels for the cavity field probe signal, the forward power, and reflected power and one up-converting channel for the drive signal of the klystron. The local oscillator signal for the converter is derived from a frequency reference at 1427 MHz which is common for all modules. The most critical component on the converter board is the mixer for the down-converter of the probe signal. It is important to minimize phase changes due to temperature and power level variations in this channel. Measurements have shown that a phase stability $< 1°$ for temperature changes of 50 degrees and a stability $< 3°$ for 20 dB changes in power level can be achieved. By use of calibration tables in the microprocessor board, these errors can be reduced by one order of magnitude. This performance would meet our specifications for long time stability even without beam feedback. The prototype version of the converter module made use of connectorized components while the final design will use microstrip components to reduce the cost and size of the board.

IF Board

The choice of 70 MHz as the IF frequency was mainly determined by the availability and low price of components at this frequency, except for the amplitude detector. The amplitude detector will be of the Schottky type, which has no improved performance at low frequencies and will therefore be operated at 1497 MHz. This avoids additional amplitude errors introduced in the down-converter. For the precision phase detector we use a four quadrant multiplier. The phase setting is accomplished by a vector modulator [2] which allows for smooth unambiguous control of the phase of the reference signal. The vector modulator can also be used as a phase controller by biasing one of the inputs and using the orthogonal input for phase modulation as is done in Darmstadt [3]. The characteristics of the vector modulator as shown in Figure 2 allows for two modes of operation. At sufficiently small input signals it acts like an almost ideal vector modulator whereas in saturated mode it can be used like a conventional phase shifter.

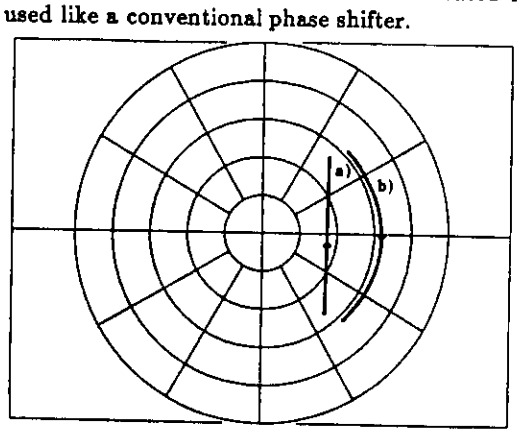

Figure 2. Characteristics the of vector modulator in a) normal and b) saturated mode.

Analog Board

The analog board provides the gain stages with the appropriate transfer functions. For stable operation of the loop the maximum gain could be set to 60 dB in each of the channels. This allows for an error reduction of a factor 10^3 for frequencies up to 100 Hz. The operational amplifiers on this board were chosen for a high gain bandwidth product of 75 MHz and a low noise of $7nV/\sqrt{Hz}$ so that they would not be the dominating factor for the residual noise in the system. An additional notch

* Supported by U.S. Department of Energy under contract DE-AC05-84ER40150.

filter at 6 MHz was helpful to suppress excitation of the $\frac{4}{5}\pi$ passband mode in the cavity.

Digital Board

A description of the digital board is given elsewhere [4] in these proceedings. During the test we made no use of the digital board in order to simplify the test setup and to concentrate on optimizing the performance of the feedback loops. Instead we made use of the existing control software on the HP computers, which allowed us to set up menus to control CAMAC modules. These modules contained essentially ADC and DAC channels. All of the functions such as settings of gains and bias signals are voltage controlled and were implemented in an easy to operate control menu. All relevant signals like phase and gradient settings and readings were displayed on the control screen.

SPICE Model

The SPICE model of the control system contains :

- transfer functions of gain stages including large signal saturation
- cavity dynamic response to PM to AM conversion
- cavity amplitude and phase vs detuning
- beam loading
- phase and amplitude response of detectors and controllers
- continous spectrum noise sources

To simulate the feedback system, all modes of SPICE are employed. AC, DC and noise analysis use a small signal frequency domain approximation to estimate RF signal amplitude and phase noise magnitudes. Use of transient analysis permits investigation of the system in the time domain, including settling time, large signal stability, and overdrive recovery.

Performance of the RF Control Module

In this section we describe the results of RF tests recently performed at CEBAF. The main issue was to show that the ponderomotive instability observed in a CEBAF cavity would not degrade the performance of the RF control system. In the regulated case there was no evidence of ponderomotive oscillation. In the following only the results concerning the quality of RF control are reported. The requirements on gains of the system are determined by the maximum tolerable residual amplitude and phase fluctuations of the accelerating field in the cavity and the noise in the unregulated case. Therefore we first present the noise conditions the RF control system has to manage.

Amplitude and Phase Noise without Control System

The test setup for the noise measurements makes use of the RF control module where the control function is turned off. Phase noise was measured with the high precision phase detector in the IF section of the control board. The noise (mainly 60 Hz) on the phase detector output was sufficiently low to allow for a resolution of the phase measurement of about 0.01 degree. In order to detect fluctuations on the field gradient to the 10^{-5} level we used an external detector diode with DC-block to avoid 60 Hz ground loops. This ensures that the gradient error is measured independently of noise voltages on the control board. With this configuration we were able to detect amplitude errors down to the 10^{-5} level within a 1 MHz bandwidth.

The results of the noise measurements are 80° phase and 20% amplitude fluctuation. It was found that the combination of turbo pump and roughing pump used for shield vacuum was one of the main noise contributors. Without these pumps and under more stable 2.0 K operation of the refrigerator the errors reduced to 30° phase excursions and 2% amplitude fluctuations. All measurements were done below threshold of ponderomotive oscillations which occured at about 2 MV/m.

A typical noise spectrum of the phase error signal at 2.6 K operation with the turbo pump on is shown in Figure 3. It shows a line at 1.4 Hz which was a major noise contributor at 2.6 K but disappeared at 2.0 K. The spectrum contains lines from the roughing pump at 29.8, 58, 88.5 and higher harmonics, and 17 Hz (second harmonic) from the Roots pumps.

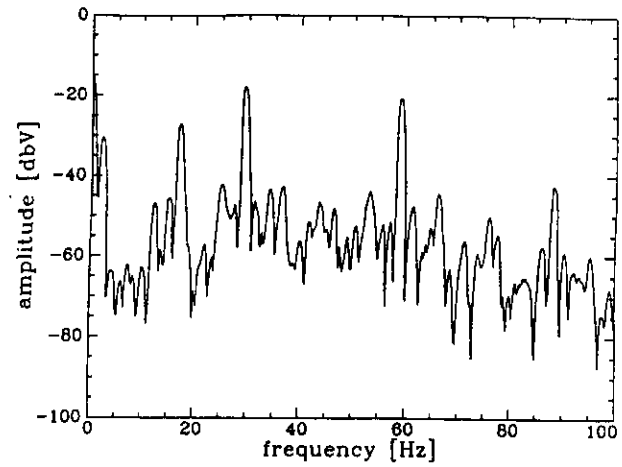

Figure 3. Spectrum of the phase error signal. The total error is $\Delta\phi \approx 80°$.

The reduction in noise with all pumps (turbo and Roots pumps) off was significant but stable operation of the control system without the Roots pump was not possible even for short time periods. This was due to large drift of the helium pressure (frequency drift of cavity) in the cryostat. It is expected that the noise in the tunnel will produce errors less than 20° for the phase and 6% for the amplitude. This comes close to the condition measured with the roughing pump off. As expected, almost all of the errors in phase and gradient are in the frequency range up to a few hundred Hz.

Residual Noise with Control System

To achieve an energy spread of the electron beam of $\Delta E/E < 1 \cdot 10^{-4}$ [5] the requirements for phase and amplitude control are $\pm 0.2°$ and $\pm 2 \cdot 10^{-5}$ [6] respectively assuming correlated errors. In the case of uncorrelated errors the residual amplitude error may be larger by an order of magnitude. From the measured phase and amplitude error it follows that the gain in the phase control loop has to be $\approx$ 50dB and in the amplitude control loop $\approx$ 75dB ($\approx$ 50dB in the uncorrelated case). This indicates that the amplitude requirements are much harder to fullfill than the requirements to phase stability. In the present design the adjustable gains in both loops could be set to a maximum of 60 dB to avoid instabilities in the loop. A modified frequency response of the gain stages will allow for up to 90 dB gain for frequencies up to 100 Hz in the amplitude control loop. During the test the control system was able to reduce phase fluctuation below the 0.4° level and provided an amplitude stability of $\pm 4 \cdot 10^{-4}$. These numbers describe the error measured within 1 MHz bandwidth. The total error in the frequency range from 0 Hz to 100 Hz was about a factor of four smaller.

The spectra in Figure 4 compares the spectrum of the amplitude signal in the unlocked and locked case. Since the dynamic range of the spectrum analyser was limited to 80 dB the lower trace does not reflect the real error spectrum. It should be noted that in the spectrum of the regulated signal no evidence of ponderomotive oscillations could be seen even if the

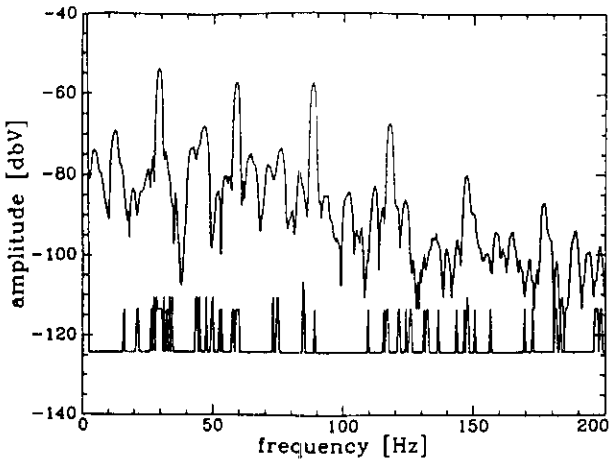

Figure 4. Spectrum of the amplitude error signal with/without control system on.

cavity was operated at 5 MV/m. Those oscillations occurred in the unlocked case at 63.4 Hz and 130 Hz.

While operating the loops independently we found that the average forward power increased by about 3 dB when the phase control loop was operated at 60 dB gain. Figure 5 shows the spectrum of the klystron drive signal with and without phase control. This effect can be explained by the far out noise of the frequency reference which is introduced by the loop phase-detector. This kind of noise does not appear in the amplitude detector. A further investigation of this problem showed that the sideband noise of the reference oscillator has to be improved to achieve the desired low residual errors on the amplitude signal.

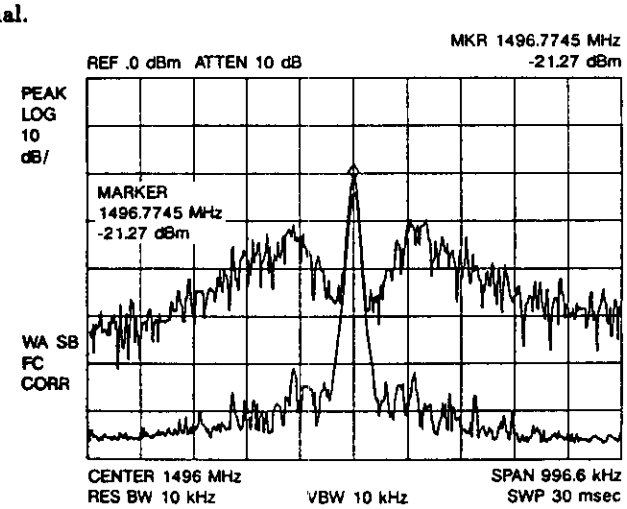

Figure 5. Phase noise of the klystron drive signal for the open and closed loop case. The gain in the amplitude channel is 50 dB, the gain in the phase channel 0 dB (lower trace) and 60 dB (upper trace).

In order to reduce amplitude fluctuations without increasing the gain in the the amplitude loop, the phase shifter in the phase control loop was replaced by a vector modulator. This modulator has the inverse transfer function of the cavity, which means that it simultaneously reduces the amplitude error when correcting for phase changes. The result of such measurements are shown in Figure 6 a) and b). In both figures only the phase loop is closed. It is evident that in the second case with a vector modulator as phase controller the amplitude noise is improved by more than a factor of four.

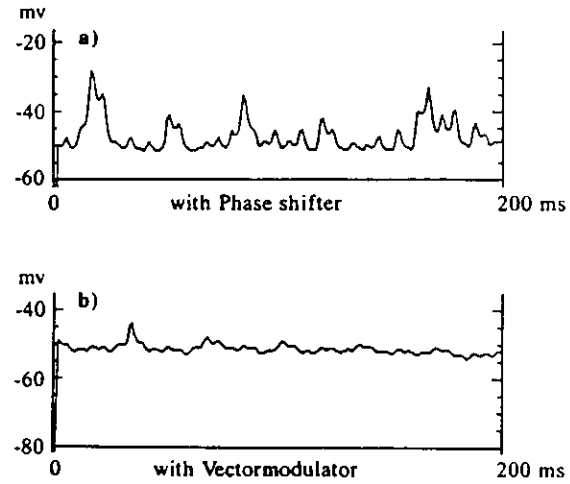

Figure 6. Amplitude error in cavity when only phase loop is activated. a) uses phase shifter as controller, b) uses vector modulator as controller.

Conclusion

The recent tests on the RF control system at CEBAF have shown that it is possible to control phase to $\pm 0.2°$ and amplitude fluctuations to the $\pm 4 \cdot 10^{-4}$ level. If the errors are uncorrelated we would meet our requirements concerning beam quality. If the errors are correlated, the amplitude control has to be improved by an order of magnitude. The present design makes use of a vector modulator as phaseshifter and increased gain at low frequencies (up to 100 Hz) by changing the frequency response of the gain stages. The next test will include measurements on correlation between error signals from different cavities and will make use of an improved RF system which should fully meet the design requirements.

Acknowledgement

The authors wish to express their thanks to R. Pico, R. Lauze, R. Abbott, R. Vignato, G. Arnold, G. Lahti and J. Montgomery who provided enormous help for the successful test of the RF control system.

References

1. J. A. Fugitt, T. L. Moore, *1987 Particle Accelerator Conference Proceedings* (Washington, 1987).
2. C. Hovater, J. Fugitt, *1988 Linac Conference Proceedings*, CEBAF-R-89-001.
3. H.-D. Gräf, A. Richter, *1988 Linac Conference Proceedings*, CEBAF-R-89-001.
4. I. Ashkenazi, *1989 Particle Accelerator Conference Proceedings* (Chicago, 1989).
5. H. A. Grunder, *1989 Particle Accelerator Conference Proceedings* (Chicago, 1989).
6. G. Krafft, CEBAF TN 0050 (1987).