CEBAF-PR-89-025
WM-89-105

Relativistic Effects in Low Energy Nucleon-Nucleon Scattering

Franz Gross
Continuous Electron Beam Accelerator Facility
12000 Jefferson Avenue, Newport News, VA 23606
and
College of William and Mary, Williamsburg, VA 23185

J.W. Van Orden
Continuous Electron Beam Accelerator Facility
12000 Jefferson Avenue, Newport News, VA 23606

Karl Holinde
Institut fur Kernphysik, Kernhorschungsanlage Julich
D-5170 Julich, Federal Republic of Germany

CONTINUOUS

ELECTRON

BEAM

ACCELERATOR

FACILITY

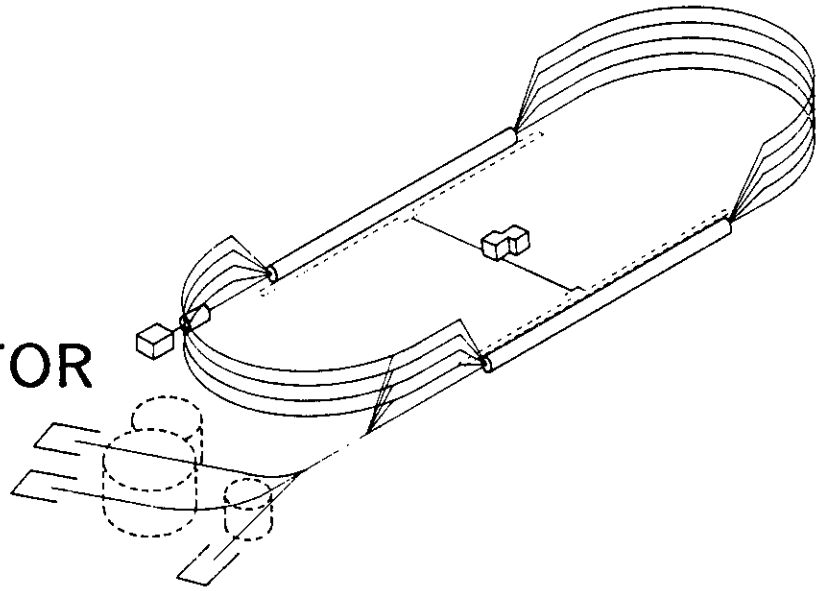

SURA SOUTHEASTERN UNIVERSITIES RESEARCH ASSOCIATION

CEBAF

Newport News, Virginia

Copies available from:

Library
CEBAF
12000 Jefferson Avenue
Newport News
Virginia 23606

The Southeastern Universities Research Association (SURA) operates the Continuous Electron Beam Accelerator Facility for the United States Department of Energy under contract DE-AC05-84ER40150.

DISCLAIMER

This report was prepared as an account of work sponsored by the United States government. Neither the United States nor the United States Department of Energy, nor any of their employees, makes any warranty, express or implied, or assumes any legal liability or responsibility for the accuracy, completeness, or usefulness of any information, apparatus, product, or process disclosed, or represents that its use would not infringe privately owned rights. Reference herein to any specific commercial product, process, or service by trade name, mark, manufacturer, or otherwise, does not necessarily constitute or imply its endorsement, recommendation, or favoring by the United States government or any agency thereof. The views and opinions of authors expressed herein do not necessarily state or reflect those of the United States government or any agency thereof.

CEBAF-PR-89-025
WM-89-105

Relativistic Effects in Low Energy Nucleon-Nucleon Scattering

Franz Gross

Continuous Electron Beam Accelerator Facility
12000 Jefferson Avenue
Newport News, VA 23606

and

College of William and Mary
Williamsburg, VA 23185

J.W. Van Orden
Continuous Electron Beam Accelerator Facility
12000 Jefferson Avenue
Newport News, VA 23606

Karl Holinde
Institut für Kernphysik, Kernforschungsanlage Jülich,
D-5170 Jülich,
Federal Republic of Germany

ABSTRACT

We show that it is possible to obtain a quantitatively excellent description of low energy NN scattering, including the deuteron, using a relativistic equation with a simple one boson exchange kernel consisting of the exchange of only π, σ, ρ and ω mesons. Relativistic properties of the meson-nucleon couplings play an essential role in the success of the description.

PACS numbers: 21.30+y, 13.75.C

Progress in many areas of nuclear physics depends on our ability to understand and describe the nucleon-nucleon interaction. In this regard, it is a great advantage to have a description which is simple, Lorentz invariant, and closely tied to a theoretical picture of the underlying dynamics. A dynamical picture tells one how to extend the description *consistently* to a large variety of nuclear processes, and in order to test any predictions at high energy or momentum transfer, it is essential that any failure not be trivially explained away as due to the breakdown of Lorentz invariance. Finally, simplicity not only makes it possible to carry out consistent calculations, but also permits us to discover what mechanisms are really essential to an understanding of the phenomena.

In this letter we describe a Lorentz invariant model of the NN interaction, based on the simplest of dynamical pictures, one boson exchange (OBE). Such models have been widely studied, but to our knowledge the work we report here is the first time a *quantitative* description of low energy nucleon-nucleon scattering has been obtained using *only* the four mesons known to be essential to any description of the nuclear force: π, σ, ρ and ω mesons. To accomplish this, we find that relativistic properties of the meson-nucleon couplings are essential. A full account of the theory and theoretical results will be published elsewhere[1].

The NN scattering amplitude and bound state emerge as a solution of a relativistic covariant wave equation previously introduced by one of us.[2-4] The novel feature of this equation is that one of the two nucleons is restricted to its positive energy mass shell, so that the relativistic scattering amplitude satisfies the following equation[1]

$$\mathbf{M}_{\lambda\lambda',\beta\beta'}(p,p';P) = \mathbf{V}_{\lambda\lambda',\beta\beta'}(p,p';P) - \int \frac{d^3k}{(2\pi)^3}\frac{m}{E_k}\mathbf{V}_{\lambda\mu,\beta\beta_1}(p,k;P)G_{\beta_1\beta_2}(k_2)\mathbf{M}_{\mu\lambda',\beta_2\beta'}(k,p';p) \tag{1}$$

where Dirac indices are represented by greek letters from the beginning of the alphabet $(\alpha,\beta,\ldots)$ and nucleon helicities by greek letters from the end of the alphabet $(\lambda,\mu,\ldots)$. In Eq.(1), $\mathbf{V}$ is the relativistic kernel (or potential), $\mathbf{M}$ is the scattering amplitude, and G the propagator for an off shell particle of four momentum k:

$$G_{\beta_1\beta_2}(k) = \frac{(m+\not{k})_{\beta_1\beta_2}}{m^2-k^2-i\epsilon} \tag{2}$$

We use the notation $k_1 = \frac{1}{2}P + k, k_2 = \frac{1}{2}P - k$, and restrict particle 1 to its positive energy mass shell so that in the CM of the pair

$$\begin{aligned} k_1 &= (E_k, \vec{k}\,) \quad ; \quad k_1^2 = m^2 \\ k_2 &= (W - E_k, -\vec{k}\,) \quad ; \quad k_2^2 = (P-k_1)^2 \\ &\qquad\qquad\qquad\quad = m^2 - W(2E_k - W) \end{aligned} \tag{3}$$

where W is the total center of mass energy and $E_k = (m^2+\vec{k}^2)^{\frac{1}{2}}$. Equation (1) is covariant, and $\mathbf{M}$ satisfies the Pauli principle *exactly* provided $\mathbf{V}$ is suitably antisymmetrized. The corresponding bound state equation is

$$G^{-1}_{\beta\beta'}\Psi_{\lambda\beta}(p;P) = -\int \frac{d^3k}{(2\pi)^3}\quad\frac{m}{E_k}\mathbf{V}_{\lambda\lambda',\beta\beta'}(p,k;P)\Psi_{\lambda'\beta'}(k,P) \tag{4}$$

with the relativistic normalization condition given in Ref. 1.

In this work, Eqs. (1) and (4) were solved numerically for a relativistic OBE kernel. The kernel has the form (in the CM system)

$$\mathbf{V}_{\lambda\lambda'\beta\beta'}(p,k;P) = \bar{u}_\alpha(p,\lambda)\ \frac{1}{2}\left[V_{\alpha\alpha',\beta\beta'}(p,k;P) + (-1)^{\mathrm{I}} V_{\beta\alpha',\alpha\beta'}(-p,k;P)\right] u_{\alpha'}(k,\lambda') \quad (5)$$

where $u(p,\lambda)$ is a nucleon Dirac spinor with helicity λ, I is the isospin of the channel, and the V's are

$$V_{1,2}(p,k;P) = \sum_i \delta_i \frac{\Lambda_1^i(p_1,k_1)\otimes\Lambda_2^i(p_2,k_2)}{m_i^2-(p-k)^2} F_i(p_1,k_1)F_i(p_2,k_2) \quad (6)$$

where the subscripts 1 and 2 represent the indicies $\{\alpha,\alpha'\}$ and $\{\beta,\beta'\}$ respectively, and i is the sum over exchanged mesons including S(scalar), P(pseudoscalar), and V(vector) with couplings of the form

$$\begin{aligned}
\Lambda^S(p_1,k_1) &= ig_s\ 1 \\
\Lambda^P(p_1,k_1) &= g_P\left[\lambda_P\gamma^5 + (1-\lambda_P)\left(\frac{\not{p}_1-\not{k}_1}{2m}\right)\gamma^5\right] \\
\Lambda^{V\mu}(p_1,k_1) &= g_V\left\{[1+\kappa_V(1-\lambda_V)]\gamma^\mu + \lambda_V\kappa_V\frac{i\sigma^{\mu\nu}}{2m}(p_1-k_1)_\nu \right. \\
&\qquad\qquad \left. -(1-\lambda_V)\kappa_V\ \frac{(p_1+k_1)^\mu}{2m}\right\}
\end{aligned} \quad (7)$$

The factor δ_i is $\tau_1\cdot\tau_2$ if the exchanged meson is isovector, and unity if it is isoscalar. For vector mesons, $\Lambda_1^V\otimes\Lambda_2^V = \Lambda_1^{V\mu}\Delta_{\mu\nu}\Lambda_2^{V\nu}$ where $\Delta_{\mu\nu} = g_{\mu\nu} - \frac{q_\mu q_\nu}{m_V^2}$ is the numerator of the usual vector propagator with $q = p_1 - k_1$. The F_i are form factors, $F_i(p,k) = h(p^2)h(k^2)f_i(q^2)$, where the functional forms used in this work are

$$h(p^2) = \frac{2(\Lambda_{\mathrm{N}}^2-m^2)^2}{(\Lambda_{\mathrm{N}}^2-p^2)^2+(\Lambda_{\mathrm{N}}^2-m^2)^2} \quad (8a)$$

and

$$f_i(q^2) = \left[\frac{(\Lambda_m^2 - m_i^2)^2 + \Lambda_m^4}{(\Lambda_m^2 - q^2)^2 + \Lambda_m^4} \right]^2 \tag{8b}$$

where m_i is the mass of the ith meson and Λ_N and Λ_m are nucleon and meson form factor masses. Finally, note that the mixing parameters λ_p and λ_v are defined so that the coupling is independent of them if both nucleons are on-shell. (Note that the vector coupling is also independent of λ_v if the anomalous moment coupling $\kappa_v = 0$.) The second (exchange) term in Eq. (5) has singularities, which are removed as described in Ref. 1.

The boson parameters were adjusted to fit the deuteron binding energy and the NN phase shifts below 300 MeV. The parameters and the χ^2 for two models are shown in Tables 1 and 2. In the fitting proceedure we used the error matrix provided by Arndt[5] to minimize correlated errors, and, after the final solutions had been obtained, used the SAID program[6] to calculate the χ^2 for the fit to the full data base, including pp data. Coulomb corrections were made using the prescription in the SAID program.[6] Table 2 shows that the quality of the fit deteriorates rapidly as we approach the π production threshold at about 300 MeV. Since these processes and singularities have been omitted from our treatment, this progressive breakdown is perhaps to be expected. The fit to the J=0 and J=1 phase parameters is shown in Figure 1. As Figure 1 and Table 2 show, our fit is quite good, and of comparable quality to the full Bonn potential,[7] or the best of the purely phenomenological potentials, such as Argonne V14.[8]

Model I contains only the π, σ, ρ, and ω mesons, but with a mixing parameter for the pion, λ_π, equal to about 0.22, corresponding to a 22% admixture of γ^5 coupling. Model

II constrains $\lambda_\pi = 0$ (pure pseudovector). A good fit then requires two more mesons, in addition to the 4 mesons of Model I. These are the η and a phenomenological spin zero, isospin one meson referred to as the σ_1. (Note that an isovector scalar meson, commonly referred to as δ, exists with a mass of 983 MeV.) The phenomenology is very sensitive to λ_π. If we wish to fit phase shifts without the σ_1 meson, we are driven to a mixed coupling with a value close to $\lambda_\pi = 0.25$.[3] With such a choice, the correct splitting between ^1S_o and $^3S_1$ central potentials can be obtained, but otherwise this splitting cannot be obtained in a OBE model unless the σ_1 (or δ, see Ref. 7) is introduced. One view is that introduction of a low mass σ_1 is a failure of conventional OBE models, because the spin and parity of the σ_1 is such that it cannot represent any 2π exchange enhancement (which is the justification for the σ).

Our ω coupling is considerably smaller than that usually obtained from OBE models, and closer to the expected SU(3) limit of 9 times the ρ coupling, or about 5.2. We believe this is because the relativistic interaction generates an intrinsic repulsion[3], and the ω can assume a more realistic strength. The "small" value of g_π should also be noted. This is consistent with the recent observations of deSwart and collaborators[10] to the effect that the neutral pion coupling is 13.1, compared to 14.4 for the charged coupling. Our single coupling lies between these two extremes.

The use of γ^5 coupling for the pion is sometimes criticized because it gives strong coupling to negative energy states of the nucleon and appears to violate chiral symmetry. However, the latter is only true if the γ^5 coupling is used without an explicit σ meson or

σ- like 2πNN interaction. The latter, if suitably constrained, can restore chiral symmetry.[4] It appears that the strength of the needed σ in such a case should grow linearly with λ_π^2, [4,11] while the ρ strength should grow as $(1-\lambda_\pi)^2$. [4] Examination of Table 1 shows that (i) the tensor coupling of the ρ, proportional to $\kappa_\rho\sqrt{\frac{g_\rho^2}{4\pi}}$, is roughly constant for the two models (4.66 for Model I and 4.71 for Model II), (ii) the ρ vector coupling, if assumed to be linear in $(1-\lambda_\pi)^2$, would satisfy the equation $0.077 + 0.51(1-\lambda_\pi)^2$, and (iii) the σ coupling, if assumed to be linear in λ_π^2, would satisfy the equation $5.05[1+2.81\lambda_\pi^2]$. These observations suggest that in our models the ρ and σ may be playing two roles, with part of their strength depending on the mixing parameter λ_π. This idea is currently under study.

In conclusion, we have found two relativistic OBE models with quite realistic parameters which provide an excellent fit to low energy NN data. This means that such data, *by itself*, provides little evidence for the existance of higher order effects, such as crossed box diagrams, or virtual Δ's. Such effects can be conveniently parameterized below pion production threshold by an effective σ exchange.[7] Furthermore, the relativistic off-shell structure of the meson nucleon couplings, particularly the dependence on the mixing parameter λ_π, is essential to the success of the Model I fit.

We also have found that the low energy *on-shell* NN data cannot completely determine the *off-shell* NN amplitude, since the two models have rather different off-shell behavior (for example, Model I couples more strongly to negative energy states because of the γ^5 admixture of the pion coupling). But since the models are simple, covariant, and closely related to an underlying field theory, it is possible to extend them consistently to the

treatment of other, related processes, and study the off-shell behavior in this way. This has already been done for $\vec{p}\ ^{40}Ca$ scattering[12], where it was found, using the RIA, that both models gave good predictions, with the differences between them small in view of the surprizingly large admixture of γ^5 coupling required by Model I. We expect these off-shell differences to be much more significant for deuteron electromagnetic reactions (form factors and disintegration) and such calculations are currently underway.

We would like to acknowledge the very considerable help of Dick Arndt, who supplied us with error matrices and the SAID program, and helped us understand the data. We also acknowledge useful conversations with D. Bugg, J.J. deSwart, R. Machleidt, and R. Wiringa. Support from the DOE, grant #DE-FG05-88ER40435 is gratefully acknowledged.

References:

1. F. Gross, J.W. VanOrden, and K. Holinde (in preparation).
2. F. Gross, Phys. Rev. **186**, 1448 (1969).
3. F. Gross, Phys. Rev. D **10**, 223 (1974).
4. F. Gross, Phys. Rev. C **26**, 2203 (1982).
5. R. Arndt (private communication)
6. R. Arndt and S. Roper, SAID facility at VPI/SU.
7. R. Machleidt, K. Holinde, and Ch. Elster, Physics Reports **149**, 1 (1987).
8. R. Wiringa, R. Smith, T. Ainsworth, Phys. Rev. C **29**, 1207 (1984).
9. D. Bugg (private communication)
10. J.R. Bergervoet, P.C. vanCampen, T.A. Rijken, and J.J. deSwart, Phys. Rev. Letters, **59**, 2255 (1987).
11. W.W. Buck and F. Gross, Phys. Rev. D**20**, 2361 (1979).
12. F. Gross, K. Maung Maung, J.A. Tjon, L.W. Townsend, and S.J. Wallace, Phys. Rev. C**40**, (1989).

Table Captions

Table 1 OBE parameters for the two models discussed in the text. Numbers in bold face were varied during the fits; others were fixed. (These are given to four places because such precision is necessary to reproduce the numerical calculation of deuteron binding energy and low energy parameters to the experimental accuracy with which they are known.)

Table 2 Lowest χ^2 obtained for the two models, compared with the Argonne V14 (Ref. 8), the full Bonn results (Ref. 7), and the Arndt-Roper Spring 89 fits (Ref. 6). Numbers are given for each energy bin and for the overall fit from 8 to 225 MeV and from 8 to 325 MeV.

Figure Caption

Figure 1 Fits to the $J = 0$ and $J = 1$ NN phase parameters. Solid line is Model I, long dashed line is Model II, and short dashed line is the full Bonn result of Ref. 7. The crosses are phase parameters from the energy independent fits of Arndt, Sp 89, Ref. 6; the circles are phase parameters from Bugg, Ref. 9.

		Model I	Model II
π	$g_\pi^2/4\pi$	**13.54403**	**13.35757**
	λ_π	**0.22557**	0.0
	m_π	138.0	138.0
η	$g_\eta^2/4\pi$		**6.40798**
	λ_η		0.0
	m_η		548.8
σ	$g_\sigma^2/4\pi$	**5.51322**	**5.04720**
	m_σ	**516.0**	**514.0**
σ_1	$g_{\sigma_1}^2/4\pi$		**0.32593**
	m_{σ_1}		**573.0**
ω	$g_\omega^2/4\pi$	**9.85106**	**9.83054**
	κ_ω	**0.14259**	**0.15050**
	λ_ω	1.0	1.0
	m_ω	782.8	782.8
ρ	$g_\rho^2/4\pi$	**0.38291**	**0.58686**
	κ_ρ	**7.52525**	**6.14920**
	λ_ρ	1.0	**0.75218**
	m_ρ	760.0	760.0
	Λ_N	**1610.0**	**1685.0**
	Λ_m	**2135.0**	**1830.0**

Table 1

Energy	Model I	Model II	Argonne V14	Bonn (1987)	VPI (SP89)
10	1.45	1.35	2.18	1.61	1.32
25	1.12	1.08	2.39	1.94	0.97
50	2.57	2.26	3.20	2.84	1.52
100	1.62	1.70	1.22	1.35	1.31
150	1.77	1.91	2.98	2.08	1.45
200	3.98	3.41	3.91	2.44	1.80
300	7.65	5.90	2.95	5.41	1.51
8-225	2.18	2.05	2.58	2.08	1.44
8-325	3.41	2.85	2.60	2.77	1.44

Table 2

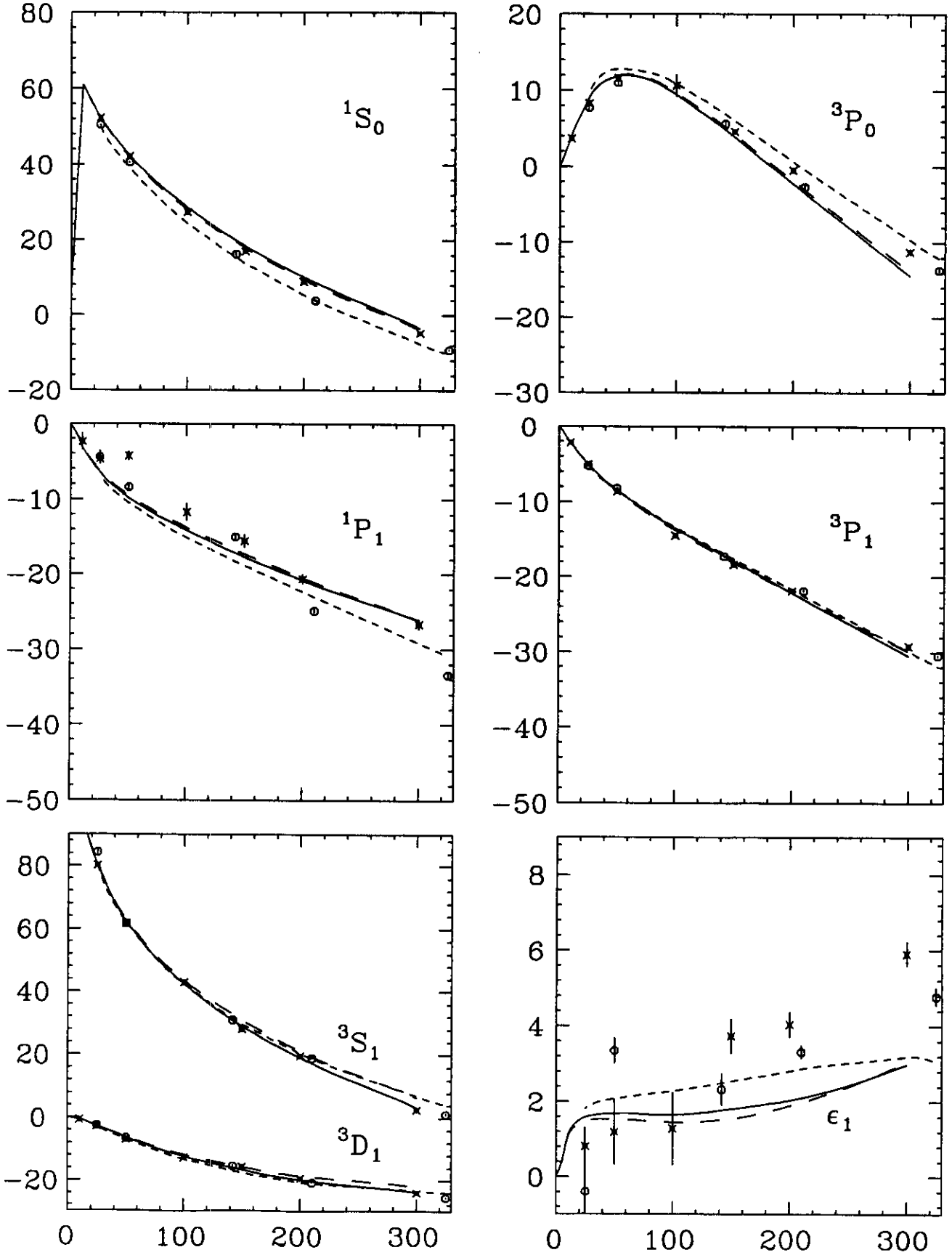
$^1S_0$
$^3P_0$
$^1P_1$
$^3P_1$
$^3S_1$
$^3D_1$
ϵ_1