CEBAF-PR-89-020

HIGH REPETITION RATE KICKERS FOR LINEAR COLLIDERS

S. Heifets, R. Rossmanith
Continuous Electron Beam Accelerator Facility
12000 Jefferson Avenue
Newport News, VA 23606

CONTINUOUS
ELECTRON
BEAM
ACCELERATOR
FACILITY

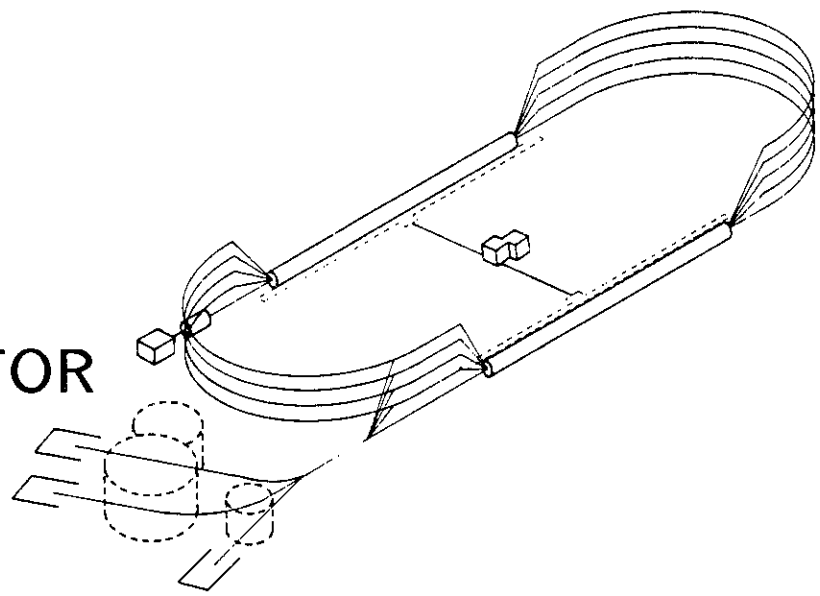

SURA SOUTHEASTERN UNIVERSITIES RESEARCH ASSOCIATION

CEBAF

Newport News, Virginia

HIGH REPETITION RATE KICKERS FOR LINEAR COLLIDERS

S. A. Heifets and R. Rossmanith

Continuous Electron Beam Accelerator Facility
12000 Jefferson Avenue
Newport News, Virginia 23606

Abstract

It was shown in a previous paper[1] that kickers with a high repetition rate can be designed by combining several cavities operating in a deflecting mode. In this paper we simplify this idea by showing that such kickers can be built also with one cavity or with an assembly of coupled cavities operating at several frequencies. We also demonstrate that this concept can be used for accelerating cavities. The electrical breakdown limit for such multimode accelerating cavities will be significantly higher than conventional single-mode cavities; therefore higher acceleration gradients, e.g., for linear colliders, can be achieved.

Fast Kicking System

The injection and ejection into and out from a damping ring, in which simultaneously several bunches are stored and cooled, requires a fast kicking system with sometimes high repetition rates. It is difficult to build conventional kickers with a repetition rate in between 1 kHz and several MHz. Kewisch and Rossmanith[1] suggested that we use several synchronized cavities operating in a deflecting mode instead of conventional kickers for this frequency range. Each of these cavities operates at a different frequency. The kicks generated by each cavity superpose in such a way that only one bunch out of a series of bunches is ejected. For the rest of the bunches the kicks cancel.

The main drawback of the above-mentioned system is its large total length. In this paper we shall discuss how such a cavity kicker system could be made shorter and how this concept can be extended to accelerating cavities. The basic idea is to use one cavity or a set of coupled cavities operating at equidistant frequencies. With such a system, periodic pulses can be obtained. The repetition rate of the pulses is inversely proportional to the frequency spacing.

The idea can be explained by taking a single cavity as a simple example. In a rectangular cavity with a transverse dimension b, the deflecting modes are:

$$f_n = \frac{nc}{2b} = \frac{15\ (\mathrm{GHz})}{b\ (\mathrm{cm})} n, \quad \Delta f = f_{n+1} - f_n = f_1. \qquad (1)$$

If N modes are excited at $t = 0$ with identical amplitudes the superposition for $t > 0$ yields

$$E(t) = \sum_{n=0}^{N-1} e^{2\pi i f_n t} = e^{2\pi i \overline{f} t} \frac{\sin(\pi \Delta f N t)}{\sin(\pi \Delta f t)}. \qquad (2)$$

Here $\overline{f} = \frac{N-1}{2}\Delta f$ is the average frequency. For $t_k = k/\Delta f$ the signal is proportional to the number of modes N. The length of the pulse is $\tau = (N\Delta f)^{-1}$ and is proportional to the inverse of the total width of the mode spectrum. These results are valid for any equidistant spectrum. In the following we assume that the bunches are short compared to the pulse width

$$\tau_B \ll 1/\overline{f} < \frac{1}{N\Delta f}.$$

Unfortunately, for a rectangular cavity, both the repetition rate of the peaks Δf and the average frequency $\overline{f}$ depend on the same parameter b. In order to obtain a kicking frequency of $\Delta f \simeq 1$ MHz the cavity has to be large ($b \simeq 150$ m), but for 1 kHz only 15 cm. A similar statement is valid for a "pill-box" cavity. Therefore a single cavity can only be used for repetition rates up to ≈ 10 kHz. For higher repetition rates the dimensions of the cavities become too large. The following schemes may be used in these cases:

In the scheme N identical cavities are used instead of a single cavity. For a "pill-box" cavity with radius b the deflecting modes have frequencies $f_n = \nu_n/b$, where ν_n are nonzero roots of the Bessel function $J_1(\nu) = 0$. For a system of coupled cavities each mode splits into N modes with the total band width defined by the coupling between adjacent cavities. The proper choice of the number of cavities and the coupling can give the desired repetition rate Δf. As long as the band width is smaller than $(\nu_{n+1} - \nu_n)/b$, each band can be considered as being independent. That gives a constraint for the upper limit of the coupling between neighboring cavities.

As an example, the typical spectrum of the lowest band for 40 identical cavities (each tuned to 245 MHz) is shown in Figure 1. The spectrum is not linear: the frequency spacing is

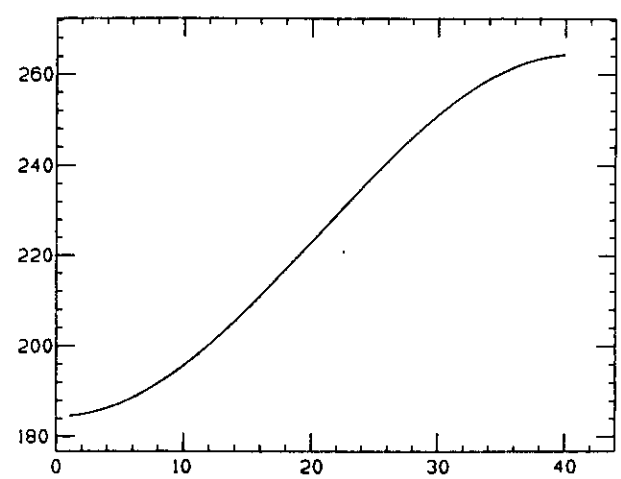

Figure 1 Spectrum of 40 Weakly Coupled Cavities, $f_0 = 224.5$.

about 3 MHz in the center of the band and is about 0.3 MHz at the edges. It is typical for a spectrum of coupled cavities. The periodic pulses can be obtained by using the large number of cavities and exciting only modes which are close to the center of the band. In Figures 2 and 3 the pulses given by the superposition of the 10 modes with numbers $15 < n < 25$ and the first 10 modes $1 < n < 10$ are shown correspondingly. The comparison clearly indicates how the time structure of the pulses depends on the linearity of the spectrum. This can also be derived from

Eq. 1. If the spectrum is not equidistant, $f_n = n\Delta f + n^2\delta f$, the nonlinearity does not affect the kth peak if

$$k|\frac{f(N) - N\Delta f}{\Delta f}| \ll 1.$$

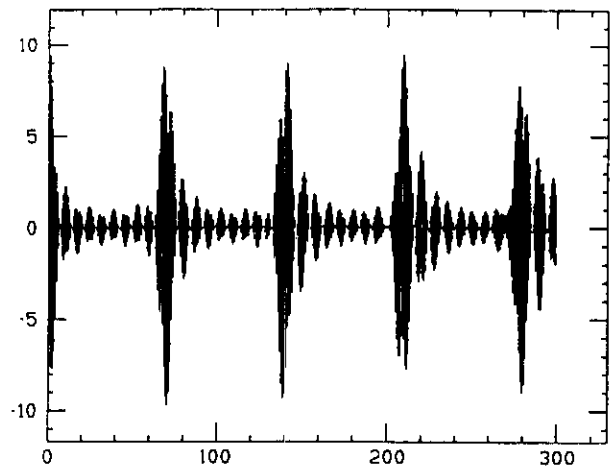

Figure 2 Pulses in a System of 40 Coupled Cavities; Modes from 16 to 25 are excited.

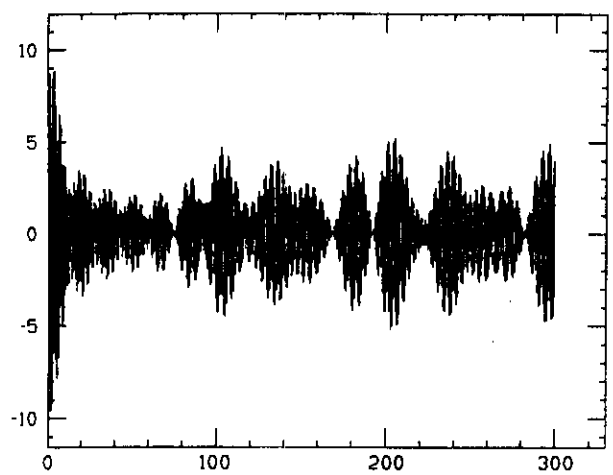

Figure 3 Pulses in a System of 40 Coupled Cavities; Modes from 1 to 10 are excited.

Better results can be obtained with a system of independent (weakly coupled) cavities, where the resonance frequency of each adjacent cavity is shifted up by Δf. This scheme is basically the same as used in[1] but all cavities operate at high equidistant frequencies rather than at high harmonics of certain low frequencies. The scheme is useful if the repetition rate is high, say $\Delta f \approx 1$ MHz, so that the frequency shift due to coupling between cavities is negligible compared to Δf. The split of the mode depends on the radius of the iris and its width. According to URMEL, for two "pill-box" cavities, each with radius 25 cm and length 5 cm, and an iris with radius 1 cm, the splitting of the frequencies of the deflecting mode at .731 MHz depends on the iris width w as follows:

$$w = 1 \text{ mm}, \Delta f = 0.213 \text{ MHz}$$
$$w = 3 \text{ mm}, \Delta f = 0.110 \text{ MHz}$$
$$w = 5 \text{ mm}, \Delta f = 0.096 \text{ MHz}$$

The transverse force experienced by a particle with the coordinate $z = vt - s$ is

$$F(t) \sim \int d\omega E_\omega^\perp(vt - s)e^{-i\omega t}.$$

For the harmonics ω_n in the nth cavity, $(n = 0, 1, 2.., N)$, located at $l_n < z < l_{n+1}$, the field is

$$E_\omega^\perp(z) = \sum_{n=0}^{N-1} \delta(\omega - \omega_n)\theta(l_{n+1} - z)\theta(z - l_n)|E_n|e^{i\phi_n}$$

and

$$F(t) \sim \sum_n |E_n|e^{i\phi_n - i\omega_n t}\theta(l_{n+1} - vt + s)\theta(vt - s - l_n).$$

Here $\theta(x)$ is the step function: $\theta(x) = 1$ for $x > 0$ and $\theta(x) = 0$ for $x < 0$.

The average kick is

$$\overline{F}(s) = \sum_n k_n e^{-i\omega_n s/v}$$

where

$$k_n = i\frac{|E_n|}{\omega_n}e^{i(\phi_n - \omega_n l_n/v)}[e^{-i\omega_n(l_{n+1} - l_n)/v} - 1].$$

This formula is similar to Eq. (2) for a single cavity. If the spectrum is equidistant $\omega_n = \omega_0 + n\Delta\omega$, $\overline{F}(s)$ is a periodic function of s with the period $T = \frac{2\pi}{\Delta\omega}$. Note that this result is independent of the phases ϕ_n of the cavities. They must only be stable in time.

If the transient time $\omega_n(l_{n+1} - l_n)/v \ll 1$, ϕ_n is equal to the time delay $\omega_n l_n/v$, and all amplitudes $|E_n|$ are equal, the amplitude of a kick is proportional to the number of cavities N. The time structure of the pulses for the system of 10 "pill-box" cavities with the shift in the frequencies of $\Delta f = 1$ MHz between adjacent cavities (frequency range 224.5 MHz – 233.5 MHz) is shown in Figure 4.

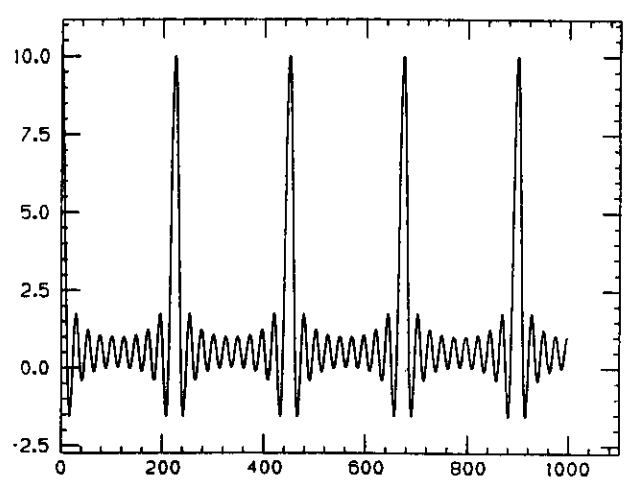

Figure 4 Pulses in a System of 10 Cavities; Frequencies from 224.5 to 233.5, $\Delta f = 1.0$.

When the losses are compensated the Q-factor for the copper cavities in the order of $10^4 - 10^5$ does not affect the results. A technical problem could be the simultaneous excitation of the modes in a band. For repetition rates of $\Delta f \simeq 1$ MHz N klystrons, one per cavity, may be required. For low $\Delta f \simeq 1$ KHz all cavities can be powered by a single wide-spectrum klystron or by a klystron modulated with the frequency Δf for generating sideband frequencies.

Conclusion

With the described scheme, high amplitude and high repetition rate pulses for the deflection of bunches can be obtained. Frequencies up to 1 MHz can be obtained by using a system of weakly coupled independently tuned cavities. It cannot be excluded that in the future a single cavity can be designed with a large number of close equidistant modes. With a 1 m long cavity and a gradient of 5 MeV/m a deflecting field order of 150 Gauss-m could be obtained. This is comparable with conventional kickers.[2]

We want to mention that the same idea can be applied for particle acceleration. In this case the excitation of N equidistant modes generates an accelerating field with an amplitude N times higher than in a single mode. Since the duration of the accelerating pulse is small, the system is more stable in regards to the electric breakdown; therefore a higher acceleration gradient can be obtained. An additional advantage is the substantial reduction of the transverse dimension of the system.

Acknowledgments

We are thankful to B. Yunn for his help with URMEL and to J. Kewisch for useful discussions.

This work was supported by the U.S. Department of Energy under contract number DE-AC05-84ER40150.

References

1. J. Kewisch, R. Rossmanith, A Continuous Injector-Ejector Scheme For Damping Rings, CEBAF-PR-88-008.
2. D. C. Fiander, Proceedings of the Workshop on Heavy-Quark Factory and Nuclear Physics Facility with Superconductive Linacs, Italian Physical Society, Editors E. D. de Sanctis et al., Courmayeur, Dec. 1987. A. Odian, *ibid.*