CEBAF-PR-89-016

IMPEDANCE AND WAKEFIELDS BEYOND CUTOFF

Joseph J. Bisognano
Continuous Electron Beam Accelerator Facility
12000 Jefferson Avenue
Newport News, VA 23606

CONTINUOUS
ELECTRON
BEAM
ACCELERATOR
FACILITY

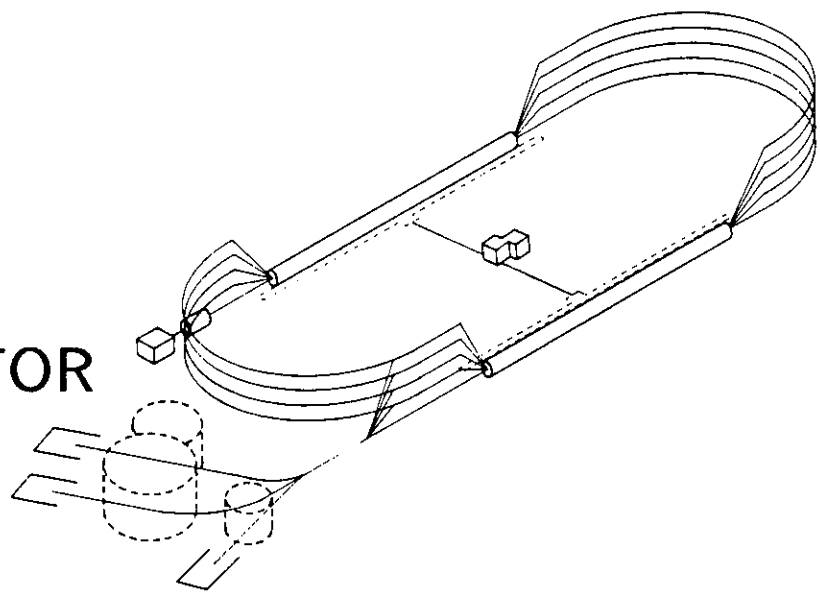

SURA SOUTHEASTERN UNIVERSITIES RESEARCH ASSOCIATION

CEBAF

Newport News, Virginia

Copies available from:

Library
CEBAF
12000 Jefferson Avenue
Newport News
Virginia 23606

The Southeastern Universities Research Association (SURA) operates the Continuous Electron Beam Accelerator Facility for the United States Department of Energy under contract DE-AC05-84ER40150.

DISCLAIMER

This report was prepared as an account of work sponsored by the United States government. Neither the United States nor the United States Department of Energy, nor any of their employees, makes any warranty, express or implied, or assumes any legal liability or responsibility for the accuracy, completeness, or usefulness of any information, apparatus, product, or process disclosed, or represents that its use would not infringe privately owned rights. Reference herein to any specific commercial product, process, or service by trade name, mark, manufacturer, or otherwise, does not necessarily constitute or imply its endorsement, recommendation, or favoring by the United States government or any agency thereof. The views and opinions of authors expressed herein do not necessarily state or reflect those of the United States government or any agency thereof.

IMPEDANCE AND WAKEFIELDS BEYOND CUTOFF*

Joseph J. Bisognano
Continuous Electron Beam Accelerator Facility
12000 Jefferson Avenue, Newport News, Virginia 23606

Introduction

The short bunch lengths and the associated high frequencies found in the latest designs of linear colliders, superconducting linacs, FEL drivers, damping rings, and synchrotron light sources have heightened the importance of understanding the high-frequency behavior of the interaction of an accelerator beam with its environment. This parametric domain is at the limits of both the numerical and analytical tools which have been developed to date, and is beyond the operational base established by existing machines. The resulting uncertainty in the coupling of a particle beam to vacuum chamber discontinuities has hindered evaluation of bunch lengthening in storage rings and transverse beam blowup in linacs, and limits confidence in assessments of beam quality in proposed designs. Recent efforts by a number of researchers have addressed the asymptotic frequency behavior of the longitudinal and transverse coupling impedance generated by discontinuities. Of particular interest is the transition from a slow rolloff, characteristic of isolated structures, to a more rapid rolloff, characteristic of an infinitely repeating structure. In addition, there has been significant progress in clarifying the implications of various length scales (wavenumber, radii, gap, total length, etc.) and geometries on the behavior of coupling impedances. Another high-frequency phenomenon, which is of particular concern in damping and storage rings, is the synchrotron radiation process in the presence of conductive boundaries. Earlier estimates[1] have indicated that this effect can provide the dominant limit on peak beam current in small, smooth-walled machines. Newer results which take into account fully the complex, finite-Q resonance structure present in a closed vacuum toroid have reinforced this concern. In this paper an overview is presented of the current understanding of impedances and wakefields well above the beam pipe cutoff. Implications of these results to beam dynamics issues are discussed, and a few remarks on remaining questions are offered.

Basic Notions of Impedance and Wake Potential

A charged particle beam passing a discontinuity in its vacuum chamber can deposit electromagnetic energy. Alternatively, a charged particle beam passing through a bending magnet can synchrotron radiate, again depositing energy. The source term in either case can be the macroscopic charge distribution of a bunched beam or the microscopic random currents at essentially arbitrarily high frequency (Schottky noise) of incipient beam instabilities. These beam-induced electromagnetic fields act on the beam and create a potentially unstable feedback loop which may limit beam current through instability and phase space dilution. The notions of wake potential and coupling impedance provide a major tool in the analysis of these processes. Consider a charged particle beam passing down the center of a cylindrical beam pipe which has an isolated cavity-like structure. The longitudinal current $I(z,t)$ will generate a longitudinal electric field $E_z(z,t)$ which for a localized, time-independent structure will be of the form

$$E_z(z,t) = \int dz'dt' \int dkdk'd\omega\, G(k,k',\omega)e^{ikz-ik'z'-i\omega(t-t')}\, I(z',t') \quad (1)$$

where $G(k,k',\omega)$ is the Fourier-transformed Green function which must satisfy causality and relativistic locality. (In general, there is an additional term describing the contribution of the charge density which will not be discussed here.) Although it is this Green function $G(k,k',\omega)$ which enters into a complete beam stability calculation, if the motion of the particles is well approximated by constant velocity trajectories during transit through the localized structure, the simpler notions of impedance and wake potential provide sufficient information for a sound analysis. Consider a test charge moving at a constant velocity v along a trajectory $r = 0$, $z = -s + vt$ of the cylindrical beam pipe. The integrated longitudinal field $\hat{W}(s)$ seen by the test charge is

$$\hat{W}(s) = \int dzdt\, \delta\left(\frac{z+s}{v} - t\right) E_z(z,t) \quad (2)$$

On inserting Equation (1) into Equation (2) and integrating, we have

$$\hat{W}(s) = (2\pi)^3 \int dkdk'\, G(k,k',kv)\tilde{I}(k',kv)e^{-iks} \quad (3)$$

where $\tilde{I}(k,\omega)$ is the Fourier transform of the longitudinal current I. The time dependence of the beam current is generated both through the gross motion of the nonuniform spatial distribution of charge in the beam and through changes in that distribution. For a quasistationary distribution of charge moving at a velocity v—that is, when the transit time is short compared to the characterisitic time for changes in the distribution—the primary time dependence will be given by $I(z,t) = I_0(z - vt)$. With this approximation

$$I(k,\omega) = \tilde{I}_0\,(k)\delta(\omega - kv) \quad (4)$$

Inserting Equation (4) into Equation (3) yields

$$\hat{W}(s) = \frac{(2\pi)^3}{|v|} \int dke^{-iks}\, G(k,k,kv)\tilde{I}_0(k) \quad (5)$$

The wake potential $W(s)$ is defined by Equation (5) for a delta function exciting current; that is,

$$W(s) = \frac{(2\pi)^2}{|v|} \int dke^{-iks}\, G(k,k,kv) \quad (6)$$

The wake potential is the effective Green function for interaction with a vacuum chamber component in the quasistatic limit. The Fourier conjugate of the wake potential is the coupling impedance, which is given by the relation

$$Z(\omega) = \frac{(2\pi)^3}{|v|}\, G(k,k,kv)\Big|_{kv=\omega} \quad (7)$$

A current $I(\omega)$ yields a voltage

$$V(\omega) = I(\omega)Z(\omega) \quad (8)$$

* This work was supported by the U.S. Department of Energy under contract DE-AC05-84ER40150.

when averaged over the structure in the quasistatic limit. Similar considerations are applicable for transverse coupling, where a transverse effective Green function (the transverse wake potential) and conjugate impedance can be defined.

Phenomena Driven by High-Frequency Impedances

The impedances of a variety of particle accelerators have been found in practice to begin to roll off at frequencies of the order of the lowest waveguide cutoff, typically a few gigahertz. Thus the dominant current limits for an unbunched, continuous beam, which can be excited in a very narrow frequency band, are dominated by antidamping modes of relatively low frequency content. The very short bunched beams found in a number of current accelerator designs, however, present a quite different picture. Consider the excitation of a localize structure by coherent internal oscillations of a bunch of rms length τ. Because of the finite length, the frequency spectrum offered by an arbitrary perturbation of the bunch has width of $1/(2\,\pi\tau)$ and is centered about the typical frequency of the perturbation. For example, a 1-mm bunch generates a corresponding frequency bandwidth of about 50 GHz. Therefore, any successful model of internal bunch stability for these short-bunch designs will include significant frequency smearing over a range where there is considerable variation in the coupling impedance and over frequencies well above typical cutoff frequencies of a beam pipe.

Internal bunch instabilities, both transverse and longitudinal, have provided a fundamental limitation in the design of short-pulse-length synchrotron light sources, high-phase-space-density damping rings, and single-pass FEL drivers. Although several formalisms have been developed to describe this class of beam instability, they share a common structure.[2] A set of basis states (possibly degenerate) is chosen which describe perturbations of the bunch phase space and current, with the higher states corresponding roughly to shorter wavelength internal ripples. For each mode there is an associated eigenfrequency. The impedance generates an additional interaction between the states, and the determination of stability reduces to an infinite dimensional eigenvalue problem. The fundamental matrix is formed from the unperturbed eigenfrequency spectrum and expectation values of the product of the impedance and beam current with the basis set. Since the basis set represents modes on a bunch of finite length τ, the expectation values effectively average the impedance over a frequency range $1/\tau$. In general, reactive impedance can couple a basis mode to itself, yielding a frequency shift. On the other hand, resistive impedance provides the primary coupling between neighboring states and acts to induce instability.

Determination of the threshold current for longitudinal and transverse instablity requires solution of an infinite dimensional matrix eigenvalue problem. In practice, the matrix is truncated and certain general features which determine instability onset are observed. Heuristically, the off-diagonal matrix elements (through the resistive component) provide a potential growth rate; the reactive component yields frequency shifts which can either increase or decrease the eigenfrequency spacing for basis states which are of the correct class to couple. Instability is observed (antidamping eigenfrequencies) when the potential growth rate exceeds the mode spacing. A large reactive impedance (when averaged over the mode spectrum) can reduce mode spacing and allow a relatively small resistive coupling to induce instability. As the current is increased the modes can cross and stability can be restored, yielding a stopband structure in current. Therefore, the threshold for this instability becomes a sensitive function of the average reactive impedance. For short bunches this average is carried from the low-frequency inductive impedance through to the high-frequency capactive impedance of the tail, and estimates of stability can become extremely sensitive to both the assumed value of the transition (i.e., cutoff) frequency between inductive and capacitive behavior and the functional form in frequency of the high-frequency rolloff. Longitudinal impedance models invoking so-called "Spear scaling" (with an implicit $\omega^{-0.7}$ dependence) and a "$Q = 1$ resonator" (with an implicit ω^{-1} dependence) have been widely used. As will be described later in more detail, recent efforts have centered about whether the high-frequency rolloff of the longitudinal coupling impedance is dominantly $\omega^{-1/2}$ or $\omega^{-3/2}$. For short bunches the choice of model can significantly affect stability estimates. Similarly, assumptions with regard to the "cutoff" angular frequency where rolloff begins—for example, at c/a or $2.4c/a$ (the TM cutoff in a circular pipe of radius a)—can yield either bunch lengthening or shortening in some parameter regimes.

The maintenance of beam quality for the short, highly charged bunches found in proposed linear colliders,[3] multipass superconducting beauty factories, and FEL drivers is a second issue which is intimately tied to the high-frequency behavior of the transverse and longitudinal coupling impedances. Since the longitudinal wake potential is related to the coupling impedance by a Fourier transform, an $\omega^{-1/2}$ asymptotic form implies that the δ-function wake $W(s)$ diverges at $s = 0$ as $1/\sqrt{s}$ whereas an $\omega^{-3/2}$ dependence yields a finite limit. The functional dependence of the transverse wake varies as the integral of the longitudinal wake, which implies $s^{1/2}$ or s behavior, respectively, in the neighborhood of $s = 0$.

The longitudinal loss factor $k_\ell(\sigma)$ is defined by the relation

$$Q^2 k_\ell = \int_{-\infty}^{+\infty} d\tau I(\tau) \int_{-\infty}^{\tau} dt I(t) W(\tau - t) \tag{9}$$

and $Q^2 k_\ell$ gives the total energy loss of a bunch of charge Q for a current distribution I describing a bunch of rms length σ. For reasonable charge distributions, $2Qk_\ell$ gives the approximate head-to-tail energy variation induced by the longitudinal wake. The transverse loss factor k_t is defined by

$$Q^2 k_t = \int_{-\infty}^{+\infty} dt I(\tau) \int_{-\infty}^{\tau} dt I(t) W_t(\tau - t) \tag{10}$$

where $W_t(\tau)$ is the transverse wake potential and Qk_t gives the average induced transverse kick. If $\omega^{-1/2}$ asymptotic behavior as discussed above is assumed, then for a gaussian bunch of sufficiently small rms length σ

$$k_\ell \propto \sigma^{-\frac{1}{2}} \tag{11}$$

and

$$k_t \propto \sigma^{\frac{1}{2}} \tag{12}$$

If, on the other hand, $\omega^{-3/2}$ behavior is assumed, then

$$k_\ell \propto \text{constant} \tag{13}$$

and

$$k_t \propto \sigma \tag{14}$$

As is clear from Equations (11–14), extrapolations of measurements performed with relatively long bunches or numerical estimates at the limits of computer capacity to shorter bunches can yield substantial differences which depend on the assumed asymptotic form of the high-frequency coupling impedance.

Design optimization can also be dramatically affected. Consider, for example, the choice of bunch length in a linear collider. If $\omega^{-1/2}$ behavior is realized, then exceedingly short bunches would appear unattractive since energy losses and bunch-induced energy spreads would be exacerbated (through Equation (11)) while transverse wakefields would be only modestly reduced (through Equation (12)). On the other hand, if $\omega^{-3/2}$ behavior is obtained, then transverse wakefields would be more strongly reduced with short bunch length (through Equation (14)) with little impact on energy loss and energy spread (Equation (13)).

Earlier Results on High-Frequency Rolloff

The study of the behavior of the longitudinal impedance at very high frequencies has a long history. Two models which have been used extensively are the diffraction model of Lawson[4] and the optical resonator model.[5] In the diffraction model the power lost by a charge traveling along a beam pipe which opens to form a resonator is estimated. For a relativistic particle the field looks very much like a plane wave, and the approximation is made that Fresnel diffraction of this wave occurs at the pipe edge. The energy that is diffracted outside the beam pipe radius is reflected at the far side of the resonator and is lost. The primary result is that the energy loss of a point particle increases as $\gamma^{1/2}$. The relativistic distortion of the electric field to an opening angle $1/\gamma$ provides a high-frequency cutoff of order $c\gamma/a$ of the field spectrum of a point charge at the pipe radius a. Thus, the $\gamma^{1/2}$ dependence of the loss factor in the diffraction model translates into an $\omega^{-1/2}$ asymptotic behavior in frequency.

The optical resonator model provides an alternative description of energy loss based on the work of Vainshtein.[6] The analogy is drawn between a set of infinite plates with circular holes and the pair of circular mirrors with infinite reflections of the optical resonator. In this model, the energy loss for large γ is found to be independent of γ, and indicates that the asymptotic form of the impedance at high frequencies must be fast enough to yield convergent integrals. Detailed analysis of this model yields an asymptotic dependence of $\omega^{-3/2}$.

Both models describe the energy loss mechanism in terms of diffraction; the fundamental distinction is that the Lawson diffraction model treats a single, isolated cavity, whereas the optical resonator model more immediately addresses a periodic array. Keil's[7] work, which numerically evaluates the losses in an infinitely long sequence of accelerating cavities, suggests that the distinction drawn between single, isolated structures versus periodic structures is of particular significance. The work finds that the energy loss is strongly γ dependent at low energies, but γ independent at high energies. Since as the energy is increased higher frequencies are generated, this result would indicate the validity of the optical resonator model for truly periodic structures. At lower energies, the frequency spectrum has not entered the asymptotic regime, but appears to be consistent with the single-cavity Lawson model. The work of Hazeltine, Rosenbluth, and Sessler[8] for the energy loss of a charged rod which moves at a constant speed past an infinite set of parallel semi-infinite conducting plates shows an even more benign behavior for a periodic structure, with the energy loss ultimately falling with increasing γ. However, the semi-infinite geometry itself reduces the dimensionality of the problem and may provide additional regularization of the beam-structure coupling.

Recent Cavity Impedance Results

In the last few years significant progress has been made in clarifying the asymptotic behavior of cavity impedances in the ultra-relativistic limit $v = c$. First, a variety of approaches have consistently shown that $\omega^{-1/2}$ is indeed the correct asymptotic behavior for an isolated cavity. Second, it has been demonstrated that the $\omega^{-3/2}$ behavior characteristic of the optical resonator model is appropriate for an infinitely periodic structure, and furthermore, that this rolloff is exhibited in finite structures which are longer than some frequency-dependent scale length. Results for an isolated pillbox cavity have been obtained by Dôme,[9] Heifets and Kheifets,[10] Bane and Sands,[11] Henke,[12] Palmer,[13] and Gluckstern.[14] Palmer's model suggests a length scale for changeover from single-cell to infinite-cell behavior. The more rigorous analyses of Heifets and Kheifets[15] and of Gluckstern[16] indeed show such a transition.

Dôme's model is based on the assumption that, for a pillbox cavity with beam pipe of radius a, the field pattern within the cavity at radii greater than a are undistorted from the closed-cavity solutions. With this approximation and summation over modes with appropriate time delays, he obtains an $\omega^{-1/2}$ behavior and expressions for the complex longitudinal and transverse impedances. The work of Heifets and Kheifets provides an iterative solution of Maxwell's equations for a pillbox with beam pipe. The leading term agrees with the result of Dôme for the real part of the longitudinal coupling impedance. In addition, it is shown that the next term in the expansion is "small" with respect to the leading term. Thus, although convergence is not assured, there is evidence that the iteration is well behaved. Bane and Sands have investigated the high-frequency behavior using Weiland's TBCI and have compared these results with their version of the Lawson diffraction model. For short bunches the TBCI computations are found to approach the predictions of this model, and are therefore consistent with $\omega^{-1/2}$ rolloff. In the work of Henke, the field problem is solved with a mode-matching technique. It is found from numerical solution that the longitudinal impedance for a radial line behaves as $\omega^{-1/2}$. Gluckstern follows Henke's mode-matching technique but extracts analytic results on $\omega^{-1/2}$ behavior for a single pillbox cavity through large-frequency estimates of kernels of Maxwell's equations. The complex longitudinal coupling impedance found agrees with that derived by Dôme and is given by the expression ($k = \omega/c$)

$$Z(k) = \frac{Z_0}{2\pi ka} \quad \frac{1}{\frac{1-i}{2}\sqrt{\frac{\pi}{kg}}} = Z_0\left(\frac{1+i}{2\pi\sqrt{ka}}\right)\left(\frac{g}{\pi a}\right)^{\frac{1}{2}} \tag{15}$$

$$k_\ell = \frac{Z_0 c}{2\pi^2 a} \quad \sqrt{\frac{g}{\sigma}} \tag{16}$$

The analogous longitudinal couplings for dipole and higher modes, which are excited by offset beams, have been found to exhibit (up to constants) the same behavior.[17,18] Of course, iterative methods may not converge, and truncation of matrices and finite mesh size may introduce spurious behavior, but the preponderance of evidence points to an asymptotic rolloff of $\omega^{-1/2}$ for an isolated single cell. A rigorous result, without approximation, for some closed geometry with beam pipe, unfortunately, has yet to be achieved. Palumbo, however, does give an analytic solution for a single step which shows a rolloff that is even slower than $\omega^{-1/2}$.

The nature of the transition between single-cell and periodic behavior is most clearly exhibited in the work of Heifets

and Kheifets. Again following an iterative procedure, they deduce a general expression for the real part of the average longitudinal impedance per cell as a function of $k = \omega/c$ for a structure composed of M cells spaced by L with gap g and outer radius b, and connected by beam pipes of radius a. Implicit in this estimate is that $ka \gg 1$, $L \sim g$, $k(b-a)^2/g \gg 1$, and, of course, $k \ll \gamma/a$.

For large M they find that the average impedance is well represented by

$$\left\langle \mathrm{Re}\frac{Z}{M} \right\rangle = \frac{2Z_0}{(ka)^{\frac{1}{2}}} \left(\frac{2L}{\pi a}\right)^2 \sqrt{\frac{\pi a}{g}}\, \Phi(k,M) \tag{17}$$

where Φ is a well-defined function of k, g, M, and L.

In the limit $M \to \infty$

$$\Phi(k,\infty) = 1 - \frac{2\pi L}{a\sqrt{\pi k g}} \tag{18}$$

and, therefore,

$$\left\langle \mathrm{Re}\frac{Z}{M} \right\rangle = \frac{2Z_0}{(ka)^{\frac{1}{2}}} \left(\frac{2L}{\pi a}\right)^2 \sqrt{\frac{\pi a}{g}} + 0(k^{-2}) \tag{19}$$

Thus, for large k, $\omega^{-3/2}$ behavior is exhibited by the real part of the longitudinal impedance. Note, however, that the $O(k^{-2})$ term requires (with $L \sim g$) that $ka^2/L \gg 1$. Gluckstern has also analyzed the infinitely periodic system and has found that for $ka \gg 1$ the longitudinal impedance is given by

$$Z(k) = \frac{Z_0}{2\pi ka} \quad \frac{1}{\frac{1-i}{2}\sqrt{\frac{\pi}{kg}} - \frac{ia}{2L}} \tag{20}$$

For $ka^2/L \gg 1$, this expression reduces to

$$Z(k) \approx \frac{iL}{\pi ka^2} + \frac{(1-i)L^2}{\pi ka^3}\sqrt{\frac{\pi}{kg}} \tag{21}$$

with the real part of the impedance agreeing with that determined by Heifets and Kheifets, and the imaginary part offering a leading ω^{-1} term. Such a term appears to be demanded by causality through a dispersion relation which links the real and imaginary parts of the coupling impedance. The next term in the expansion of the real part agrees with the $O(k^{-2})$ of Heifets and Kheifets. Note that for small k, single-cavity values are obtained. This behavior is suggestive of Keil's low-energy results discussed previously. It is clear on comparing equations (20) and (21) that the magnitude of the longitudinal impedance is reduced in the infinitely periodic system from that obtained for a single cavity.

For a large but finite number of cells M, Heifets and Kheifets find that for $1 \ll (ka^2/L) \ll M^{2/3}$, the system again behaves as an infinite system and is well approximated by the $k^{-3/2}$ term. However, when $ka^2/L \gg M$, the single-cavity result with $k^{-1/2}$ behavior is reproduced. It is argued that at high frequencies the dominant longitudinal wavenumber $k_{\|}$ and normalized frequency k become more nearly equal; i.e., $k_{\|} - k \approx (ka^2)^{-1}$. Hence, if the structure satisfies $ML \ll ka^2$, there will be insufficient phase shift for interference among cavities to be of importance in reducing the beam coupling. Following Palmer, consider a bunch of length w passing along the center of a beam pipe of radius a with interspersed discontinuities. These discontinuities will cause distortion of the bunch field. Equilibrium is reached when this disturbance (initially due to fields at the head of the bunch) overtakes the tail of the bunch. This distance is of the order a^2/w. Since the spectral content of this bunch is of the order $k \sim 1/w$, this length scale matches that found by Heifets and Kheifets. In the limit $M \to \infty$ the $k^{-1/2}$ region moves out to infinity, leaving the $k^{-3/2}$ asymptotic form. Palmer also argues that the Mth cavity of a chain has its loss factor reduced by a factor $2/(1+\sqrt{M})$ from that of a single cavity until the equilibrium state of loss is reached.

From Equation (20), single-cavity behavior is also found for $(ka^2)/L \ll 1$. In this case, the interference length is less than the length of a single cell. Clearly, for sufficiently small k the basic approximations fail, and one enters the regime of isolated resonances. The interval $M^{2/3} \ll (ka^2/L) \ll M$, as well as the "spaces" represented by "$\ll$", are transition regions which required detailed evaluation of Φ.

In summary, a multitude of length scales appears in this problem: k^{-1}, total length, aperture radius, cavity radius, cell length, and cell gap—all of which may be involved in the determination of asymptotic behavior. As noted earlier, the results discussed above apply when $ka \gg 1$, $L \sim g$, $k(b-a)^2/g \gg 1$. In this regime ka^2/L appears as the primary scaling variable. For a structure of M cells, the average longitudinal impedance is well approximated in functional form by that of a single cell for $(ka^2/L) \ll 1$ and for $(ka^2/L) \gg M$. In the intermediate regime $1 \ll (ka^2/L) \ll M^{2/3}$ the coupling resembles that of an infinitely periodic structure in form and magnitude.

Step Transitions

When $k(a-b)^2/g \ll 1$, the above approximations fail, and a new asymptotic regime, the step, is entered. The longitudinal loss factor for a step has been discussed by a number of researchers.[19,20,21] Significantly, a closed-form expression has been derived by Palumbo. The longitudinal impedance in the limit $g \to \infty$ is asymptotically constant. For an up-step (from a smaller to larger pipe) the constant corresponds to a loss. In this case the loss factor is inversely proportional to the bunch length. For a down-step (from a larger pipe to a smaller pipe) the constant is zero, but the low-frequency impedance implies acceleration of the bunch. Presumably, this energy is derived from the field energy between the inner and outer radii. Note that step wakefields and losses, in contrast to cavities with equal-radii beam pipes,[22] are not symmetric with respect to beam direction. The work of Chan and Schweinfurth[23] using TBCI confirms this picture. Since their main concern is induced energy spread in small-aperture wigglers, they investigated separately the down-step and up-step cases. It should be noted that the notion of impedance with its implicit integration from $-\infty$ to $+\infty$ is inadequate to the task of evaluating wiggler performance. In general, they find that the bunch gains energy when it enters a down-step and that the energy spread and gain increase with smaller (more gradual transition) taper angles. On the other hand, the bunch loses energy when it enters an up-step, and the energy spread and loss increase with larger (more rapid transition) taper angles. Again using TBCI, Bisognano, Heifets and Yunn[24] have studied the dependence of the loss factor on bunch length σ and taper angle of a combined up-step/down-step transition (a long cavity). For $(b-a)^2/(\sigma g) \ll 1$ they find a σ^{-1} dependence, consistent with the analytic results. Tapering is found to decrease the longitudinal loss factor, but this improvement is significantly degraded for shorter bunch lengths.

Synchrotron Radiation Impedance

For small storage rings there appears to be another important source of interaction of the beam with its environment—the synchrotron radiation process. The effect of synchrotron radiation in a bend of radius ρ and angle θ may be expressed in terms of a machine impedance of magnitude[25]

$$|Z(n)| = 354\left(\frac{n\rho}{R}\right)^{\frac{1}{2}}\left(\frac{\theta}{2\pi}\right) \text{ ohms} \tag{22}$$

at harmonic n relative to the machine circumference $2\pi R$. However, the synchrotron radiation in the bend magnets is suppressed at frequencies below a cutoff value many times the TM mode cutoff. For a "vacuum" chamber consisting of two infinite parallel plates separated by $2h$, the synchrotron radiation will be fully unshielded only for harmonics n satisfying

$$n > \frac{R}{\rho}\left(\frac{\pi\rho}{2h}\right)^{\frac{3}{2}} \tag{23}$$

The peak value of the resistive component of the coupling impedance is found to be well approximated by[26]

$$\mathrm{Re}\Big(Z(n)\Big) \simeq 300\frac{h}{R}\Omega \tag{24}$$

For small machines (radius less than 100 meters) this effect apparently can provide the dominant source of high-frequency impedance. Random currents (Schottky noise) which exist at arbitrarily high frequecies on a bunched beam can in principle self-couple through this mechanism and generate internal bunch instabilities. However, the parallel plate geometry for which Equation (22) and Equation (23) apply is open and does not exhibit the full resonant structure that would be found in a closed, toroidal vacuum chamber. Thus, although it can be expected that Equation (24) holds in some averaged sense, there has been a need to clarify the resonance structure including widths. This analysis has been carried out by Warnock and Morton,[27] and also Ng.[28] For a ring of 6-meter radius and 2-centimeter full aperture, a resonant peak of over 30 Ω and a gigahertz width is found. The estimate from Equation (24) of 0.5 Ω indicates that resonant enhancement is significant. It should be noted that application of the longitudinal impedance found should not be naively applied to standard bunch lengthening formulas since the frequency, phase, and spatial character of the synchrotron radiation impedance is quite different from that which has generated instabilities in existing rings, which are less smooth than those that are now being proposed. In particular, the resonance condition is sensitive to the horizontal position, and only a fraction of a typical storage ring beam may act coherently.

Open Issues

Although the recent results reported in this paper indicate strongly that the longitudinal impedance of an isolated cavity-like structure has an $\omega^{-1/2}$ rolloff, and a periodic structure has an $\omega^{-3/2}$ rolloff, a rigorous proof has yet to be achieved. Finite-length systems as presented by this isolated cavity problem or by bunched-beam stability analysis have proven intractable in the exact sense, with most work relying on truncation of an essentially infinite dimensional problem. Any progress in this area would not only yield possible confirmation of the various approximate results, but would offer a powerful tool to address a variety of accelerator beam dynamics questions.

For structures with $L \sim g$, ka^2 provides the length scale for transition between isolated and periodic limits. However, the detailed nature of the transition needs further attention. For a repeating structure, the cells have been assumed identical, and the question remains whether imperfections may degrade the cavity-to-cavity interference which reduces the coupling impedance in a long structure. For $g \ll L$, the situation is less clear[28] and further work is necessary. A related, unresolved issue is the rolloff of an isolated structure in a ring. The effect of tapering on reducing the beam coupling to vacuum chamber discontinuities has been addressed numerically, but finer mesh work is required. To date there have been no clear analytic results on the scaling of the impedance reduction offered by tapering with bunch length and taper angle.

The results of Warnock and Morton and of Ng clearly indicate that in a closed geometry there is a self-interaction of the beam through the synchrotron radiation process which is not of negligible strength. In fact, the impedance values estimated demand further study to ensure that the phase space densities desired in both damping rings for linear colliders and high-brightness synchrotron light sources are obtained. This work should include both theoretical beam dynamics calculations and experiments on small electron storage rings. Unfortunately, the combination of discontinuity cleanliness and small radius required to observe synchrotron-radiation-induced instability may be hard to find in the older generation of machines, and a small experimental machine dedicated to this study may be needed. Such a device would also be of use in evaluating component impedances (cavities, bellows, steps, slotted vacuum chambers) at frequencies too high for confident wire or bead pull measurements.

References

1. J. Bisognano, et al., Particle Accelerators, 18, 1986.
2. C. Pellegrini, "Single Beam Coherent Instabilities in Circular Accelerators and Storage Rings," in Physics of High Energy Accelerators, AIP Conference Proceedings No. 87, 1982.
3. A. Chao, B. Richter, and C-Y Yao, Nuclear Instruments and Methods 178, 1980.
4. J. D. Lawson, "Radiation from a Ring Charge Passing Through a Resonator," RHEL/M 144, Rutherford High Energy Laboratory, 1968.
5. D. Brandt and B. Zotter, CERN-ISR/TH/82-13.
6. L. A. Vainshtein, Soviet Phys. JETP 17, 1963.
7. E. Keil, Nuclear Instruments and Methods 100, 1972.
8. R. Hazeltine, M. Rosenbluth, and A. Sessler, Journal of Mathematical Physics, 12, 3, 1971.
9. G. Dôme, "Wake Potentials of a Relativistic Point Charge Crossing a Beam-Pipe Gap: An Analytic Approximation," 1985 Particle Accelerator Conference, IEEE Transactions in Nuclear Science, NS-32, 1985.
10. S. A. Heifets and S. A. Kheifets, "High-Frequency Limit of the Longitudinal Impedance," CEBAF-PR-87-030 (to be published in Particle Accelerators).
11. K. Bane and M. Sands, "Wakefields of Very Short Bunches in an Accelerating Cavity," SLAC-PUB, 1987 (to be published in Particle Accelerators).
12. H. Henke, "Impedances of a Set of Cylindrical Resonators with Beam Pipes," CERN preprint, 1987 (to be published in Particle Accelerators).
13. R. B. Palmer, "A Qualitive Study of Wake Fields for Very Short Bunches," SLAC-PUB-4433, 1987 (to be published in Particle Accelerators).

14. R. L. Gluckstern, "High Frequency Behavior of the Longitudinal Impedance for a Cavity of General Shape," 1988.
15. S. A. Heifets and S. A. Kheifets, "High-Frequency Limit of the Longitudinal Impedance of an Array of Cavities, SLAC-PUB-4625, 1988 (submitted to Physical Review D).
16. R. L. Gluckstern, "Longitudinal Impedance of a Periodic Structure at High Frequency," 1988.
17. J. J. Bisognano, S. A. Heifets, and B. C. Yunn, "Asymptotic Behavior of Impedances," CEBAF TN-75, 1988.
18. R. L. Gluckstern (private communication).
19. V. E. Balakin and A. V. Novokhatsky, Twelfth International Conference on High Energy Accelerators, 1983.
20. S. A. Kheifets and S. A. Heifets, "Radiation of a Charge in a Perfectly Conducting Cylindrical Pipe with a Jump in its Cross Section," Linear Accelerator Conference, 1986.
21. L. Palumbo, "A Diffraction Radiation Model for Energy Loss," Inf-87/92(P), 1987; also, "Analytical Calculation of the Impedance of a Discontinuity" (to be published in Particle Accelerators).
22. R. Gluckstern and B. Zotter, "The Coupling Impedance of Asymmetric Cavities," LEP-Note-613, 1988.
23. K. C. D. Chan and R. Schweinfurth (private communication).
24. J. J. Bisognano, S. A. Heifets, and B. C. Yunn, "Loss Parameters for Very Short Bunches," CEBAF-PR-88, 1988.
25. A. Faltens and L. J. Laslett, 1975 Isabelle Summer Study, BNL-20550, 1975.
26. R. L. Warnock and P. Morton, "Fields Excited by a Beam in a Smooth Toroidal Chamber Part I: Longitudinal Coupling Impedance," SLAC-PUB-4562, 1988 (to be published in Particle Accelerators).
27. K-Y. Ng, "Resonance Impedance in a Toroidal Beam Pipe," SSC-163, 1988 (to be published in Particle Accelerators).
28. R. L. Gluckstern, "Longitudinal Coupling Impedance for Several Small Pillboxes," CERN-LEP-TH/88-39, 1988.