CEBAF PR-89-011

MODULAR MAGNET CURRENT REGULATOR

N. Dobeck, G. Burtner, and R. LaMora
Continuous Electron Beam Accelerator Facility
12000 Jefferson Avenue
Newport News, VA 23606

CONTINUOUS
ELECTRON
BEAM
ACCELERATOR
FACILITY

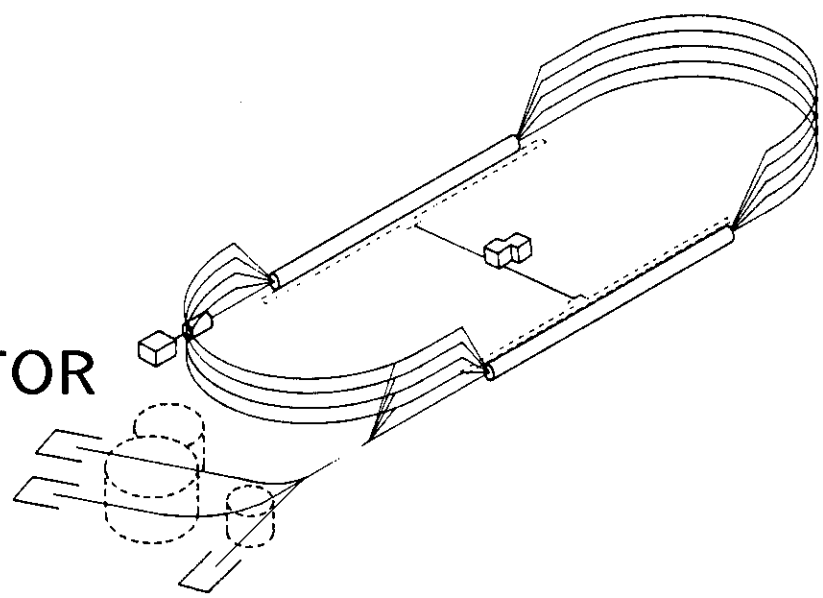

SURA SOUTHEASTERN UNIVERSITIES RESEARCH ASSOCIATION

CEBAF

Newport News, Virginia

MODULAR MAGNET CURRENT REGULATOR

Nick Dobeck, George Burtner, and Robert LaMora
Continuous Electron Beam Accelerator Facility*
12000 Jefferson Avenue, Newport News, Virginia 23606

Abstract

A modular power regulation system has been developed to handle the many low-power correction and focusing magnets used for beam transport. The system consists of numerous 32-channel assemblies, each containing a bulk power supply, CAMAC control crate, and card cage space for current regulators. Regulators are linear, bipolar modules capable of parallel connection for higher power output.

Introduction

The CEBAF beam transport magnet system has many corrector and focusing magnets that require relatively low-power current regulators capable of 0.1% regulation. The required power ranges from 200 watts for the corrector magnets to approximately 800 watts for quadrupole focusing magnets in the high-power arc sections of the accelerator. A system is being designed which uses common modules that can be applied throughout the accelerator. The basic power supply assembly consists of a standard two-bay relay rack containing the necessary equipment to handle 32 of the standard 200-watt current regulator modules. Higher power requirements are handled by adding slave regulator units.

System Configuration

The block diagram of a typical system is shown in figure 1 and the rack layout is detailed in figure 2. Because approximately 80 of these assemblies are required, considerable standardization is possible in rack wiring, component use and documentation.

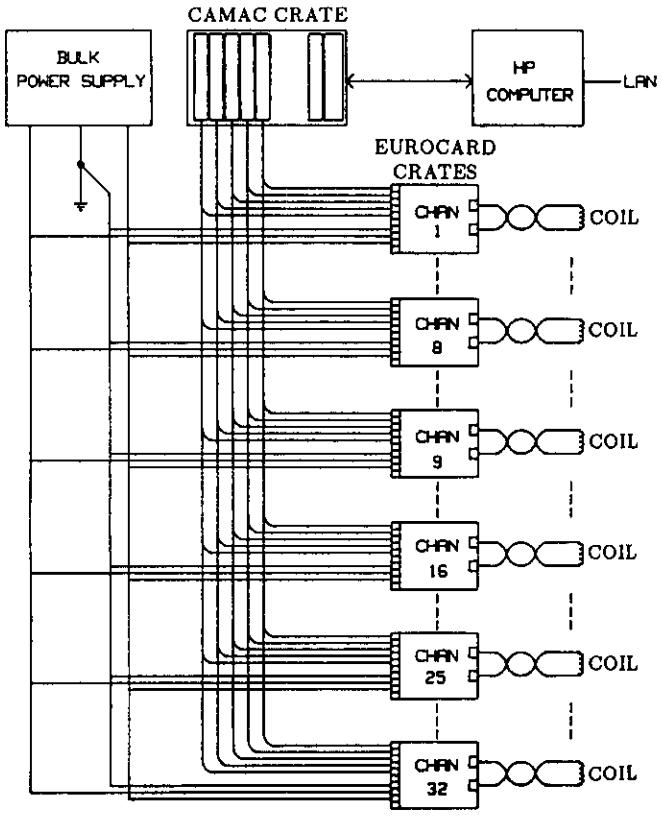

Figure 1 System Block Diagram

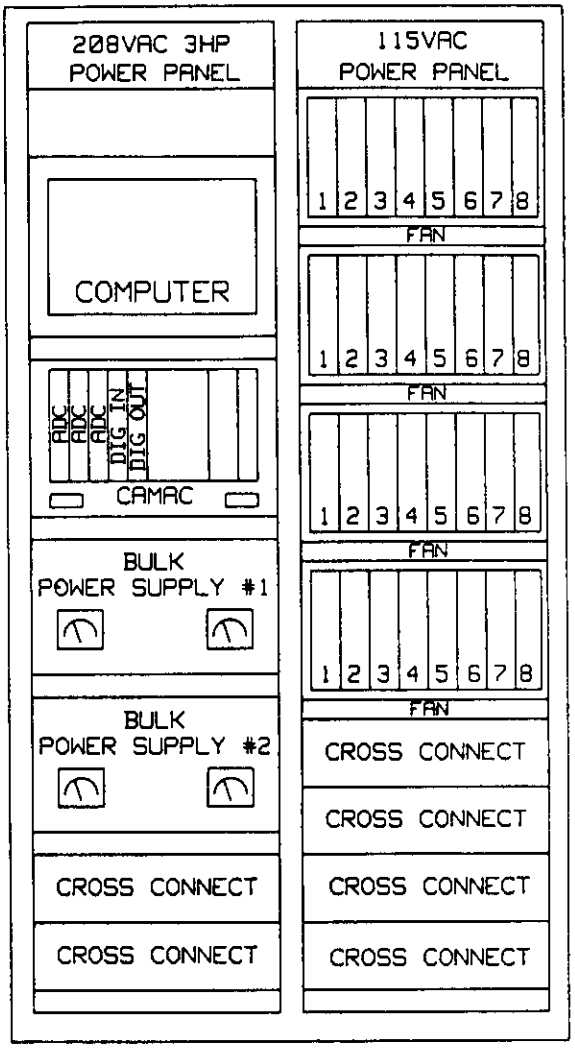

Figure 2 Rack Layout

The AC power wiring is the same in each of the power assemblies. The bulk power supplies, which are common to all the regulator channels, are fed with 208 VAC, 3 phase. The wiring to the magnets is dependent on the configuration of current regulators and slaves in the particular system.

The regulator and slave modules are housed in Eurocard cages. Four Eurocard cages are needed to hold the full complement of 32 regulator modules. The Eurocard system is particularly applicable for this power system because card connectors with pins capable of handling up to 15 amperes each are available.

Although only the corrector magnets require a bipolar regulator, all the power supply systems will have this capability. This will allow the entire range of power needs to be handled by two basic modules, a master regulator and a slave unit. Having only two basic modules will keep the initial development costs down, make the configuration of the systems very versa-

* This work was supported by the U.S. Department of Energy under contract DE-AC05-84ER40150.

tile, reduce the number of spares needed in inventory, and make maintenance much easier.

System monitor and control is handled by CAMAC modules located in a crate which is either in the two-bay relay rack or located in an immediately adjacent rack. The regulator command reference signals are furnished by 12-bit, 16-channel DAC modules. The signals from current shunts are read by a 32-channel ADC module. Digital I/O signals are handled by a 32-channel digital output module and a 32-channel digital input module. One command and one status bit are available for each of the 32 regulator channels. Because of the relatively modest regulator performance required and the close proximity of the CAMAC control modules to the regulators, the reference and monitor signals will be run as analog signals to and from the CAMAC modules. The ground reference for a multi-channel power supply is the CAMAC system common.

Although the power supply is nominally designed for 32 channels, it can be configured in various ways depending on the required load power. A given eight-slot Eurocard cage can be set up with the nominal eight 200-watt regulators powering eight independent loads. At the other extreme it can be configured with a single master regulator in parallel with seven slave cards driving a single magnet requiring 1600 watts.

Bulk Power Supply

The bulk power supply is a straightforward three-phase unit using capacitive filtering. To keep the weight of this power supply within reason, it has been designed to furnish enough power for 16 current regulators. Thus two bulk power supplies are needed to fully power 32 regulator channels. No active pre-regulation is required because the regulator modules are able to satisfactorily reject any voltage disturbances or ripples that the filter capacitors pass. This power supply furnishes +20 VDC and -20 VDC to the busses in the Eurocard cages.

Regulator Module

A simple circuit diagram of the 200-watt master regulator module is shown in figure 3. Amplifier U1 accepts an analog command signal from a CAMAC DAC module. U1 then converts this signal to an on-board reference. The differential input of U1 serves to attenuate any common mode ground noise existing between the regulator and the CAMAC DAC output. The output of U1 drives the positive input of amplifier U2.

U2 is the summing amplifier of the control loop and provides the summing junction for the reference and feedback signals. This amplifier also furnishes most of the open loop gain for the control loop. The output of U2 provides a drive signal for the on-board power stage.

The regulator's power section consists of Q1 and Q2. Positive output current flows through Q1, an NPN transistor, while negative output current flows through Q2, which is a PNP device. Much of the available volume of the Eurocard module is taken up by the heat sink for Q1 and Q2.

The output current flows through a magnet and into a shunt resistor which is tied to common. The shunt resistor is a precision four-wire device which is mounted externally to the regulator circuit board to minimize heat buildup. The load current flowing through the shunt provides a voltage signal to the input of U3 and U4. Amplifier U3 scales the shunt voltage, which is then fed to the summing junction of U2. The gain of U3 is set so that the regulator circuit produces full-scale current output in response to a full-scale command signal from the DAC. U3 is configured as a differential amplifier to minimize common mode noise from the externally mounted shunt resistor. The output of U4 provides a buffered monitor signal to a CAMAC ADC channel.

The master and slave cards provide 15,000 microfarad capacitors to minimize the effect of line transients and to reduce the 360-Hz ripple from the bulk power supply.

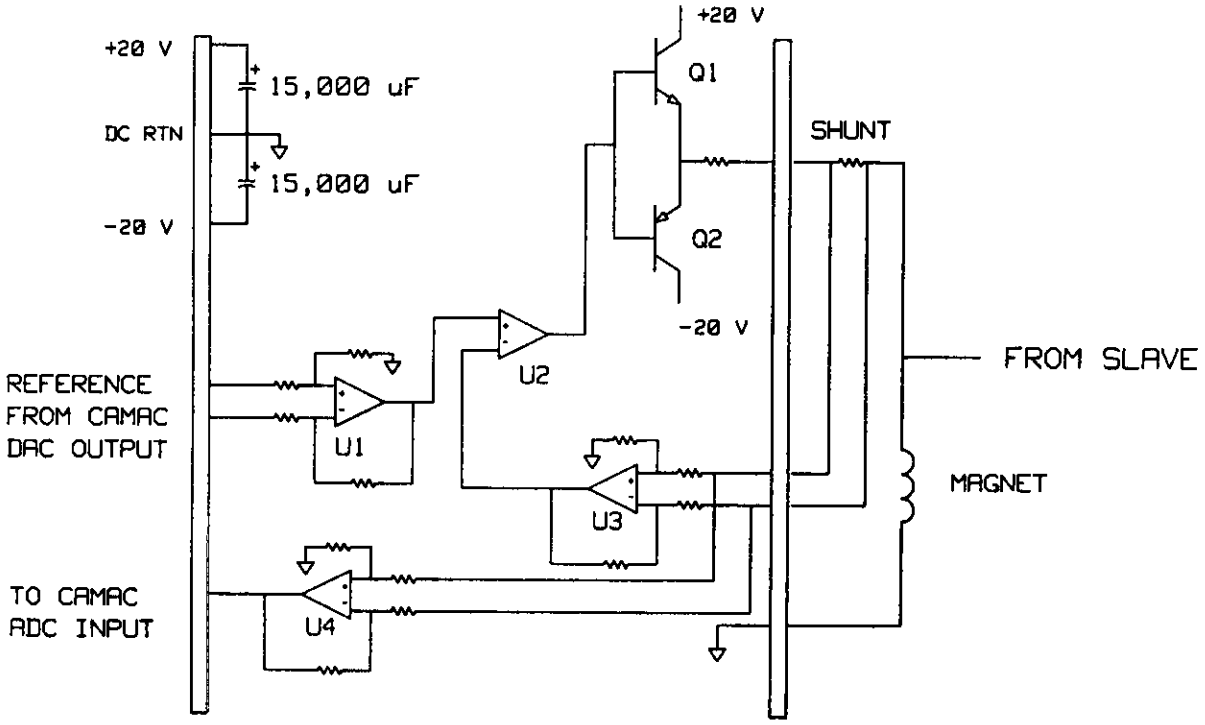

Figure 3 Master Module

Slave Module

The circuit diagram of a standard slave module is shown in figure 4. This device has simpler low-level circuitry than the master regulator card because only the circuitry necessary for regulating the current is provided. When slave units are parallel with a master regulator, reference inputs of all the modules are connected in parallel and fed by one DAC channel. This insures that each of the modules will furnish a nearly equal share of the current. Full command voltage from the CAMAC DAC will result in full-scale output current. As with the master regulator, most of the available module volume is taken up by heat sinks for the output transistors.

Prototype

A 24-channel prototype assembly has been built which is presently being used to power the various steering magnets and magnetic lenses in the injector test area. Because the impedances of these coils are considerably higher than what will be used in the rest of the accelerator, the output stages of these regulators are power operational amplifiers capable of furnishing about 1.5 A rather than higher-power discrete transistors. The coils used for the injector beam line require considerably less power so that the prototype modules are built on single-height Eurocards rather than on double-height cards.

Summary

A straightforward and versatile power supply system has been designed to drive the low-power corrector and focusing magnets in the accelerator beam transport system. Very simple bipolar master and slave modules cover the 200- to 1600-watt power range. Common bulk power supplies furnish power for the regulators. Monitor and control of the regulator channels is provided by CAMAC ADC and DAC modules. One status bit and one control bit are provided for each regulator.

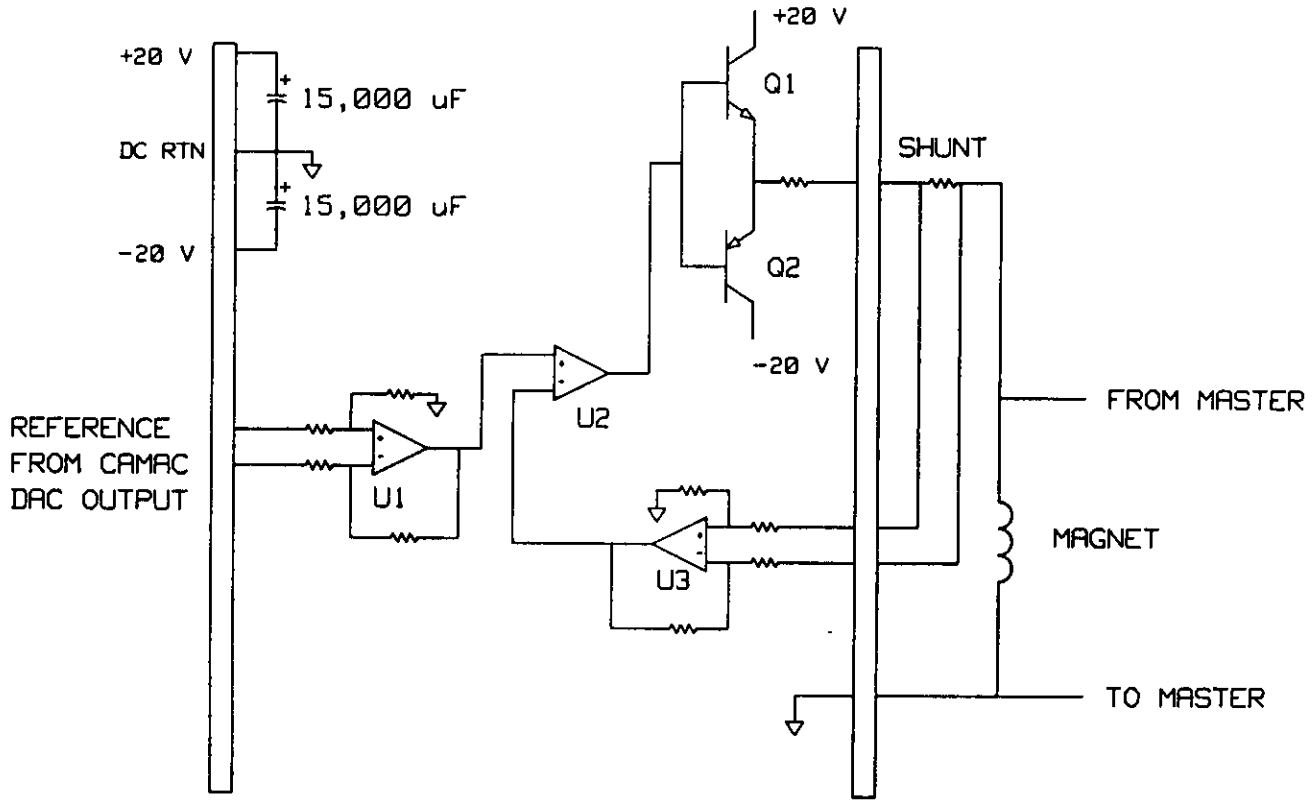

Figure 4 Slave Module