CEBAF-PR-89-009

MICROPROCESSOR CONTROL FOR THE CEBAF RF CONTROL MODULE

Isaac Ashkenazi and George E. Lahti
Continuous Electron Beam Accelerator Facility
12000 Jefferson Avenue
Newport News, VA 23606

CONTINUOUS

ELECTRON

BEAM

ACCELERATOR

FACILITY

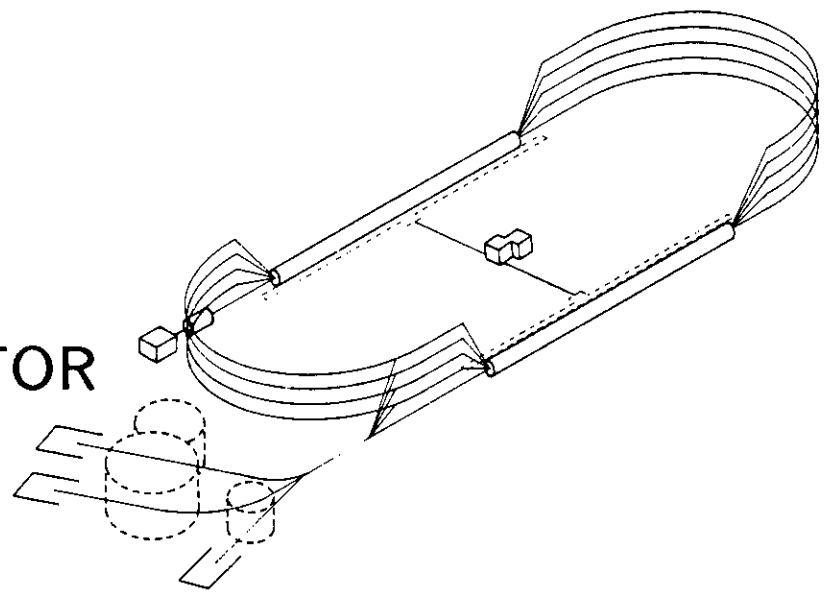

SURA SOUTHEASTERN UNIVERSITIES RESEARCH ASSOCIATION

CEBAF

Newport News, Virginia

MICROPROCESSOR CONTROL FOR THE CEBAF RF CONTROL MODULE*

Isaac Ashkenazi and George E. Lahti
Continuous Electron Accelerator Facility (CEBAF)
12000 Jefferson Ave., Newport News, VA 23606

Introduction

The CEBAF RF system is controlled by an array of local control computers set in a network and supervised by a central RF system supervisory computer. Each local computer, geographically located near a cluster of 32 klystrons in one service building above the accelerator tunnel, controls the parameters of these klystrons. The RF Control Module constitutes the control link between the local computer and the individual klystron and RF chain. The communication between the RF Module and the local computer is achieved through CAMAC.

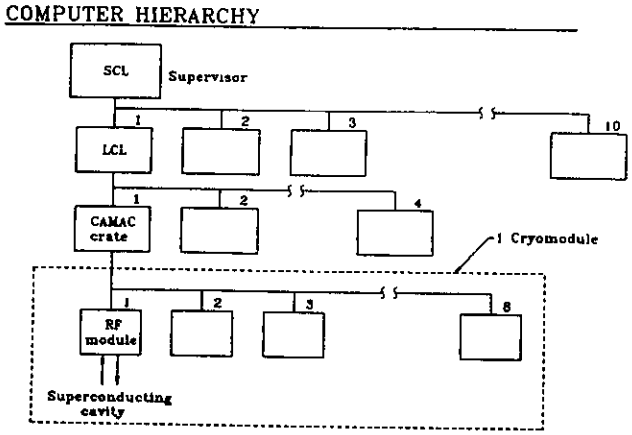

Figure 1: Computer control hierarchy of RF control module.

The RF Control Module is composed of four functionally different blocks:

- The RF converter section
- The IF signal processing section
- The analog section
- The microprocessor section

In this paper we will review the microprocessor section of the RF Control Module and explain the way it reduces the load on the local RF computer by providing tight closed loop control over the RF chain that it is assigned to. We will cover both the hardware and the software aspects of the subject.

Hardware Review

Functional Description: The RF parameters control circuitry is composed of elements whose performance depends upon their individual physical properties and is affected by the ambient temperature. Each RF chain has a specific calibration table which is to be considered when it is controlled or monitored. Keeping these calibration tables in the local computer memory would require that calibration corrections be made by the local computer and would thus slow down its operation (which covers 32 klystrons). In this configuration, changing a circuit element in the RF control chain would require a closely followed process of changing the calibration data in the local computer database.

The use of a microprocessor in each RF module makes calibration considerations a much easier subject. The microprocessor board in the RF Control Module provides a local computing power that can be used for calibration and linearization purposes. The calibration and linearization data specific to each parameter control or monitor chain is stored in EEPROM memory, which is an integral part of the microprocessor circuitry. The whole RF Control Module is physically contained in one hardware package. This configuration excludes the possibility of changing analog or RF boards in the field without changing the related calibration data, which stays closely coupled to the associated hardware.

The large number of parameters per RF channel, and the frequency at which the local control computer accesses each RF channel, make necessary the use of an "in module" microprocessor. The local computer accesses each RF chain every 100 msec and reads or writes status and set points for individual parameters in the chain. The tasks of maintaining these set points and updating the local computer on the status of the RF chain are fulfilled by the microprocessor. To this end, the microprocessor controls a set of A/D and D/A converters. The possibility of configuring the mode of operation of the microprocessor through software commands relayed through CAMAC makes feasible a very tight control on demand of certain RF parameters.

Following is a partial list of parameters controlled and monitored by the microprocessor:

1) Phase set point 2) Phase modulator offset operating point 3) Phase modulator adjust 4) Phase loop gain 5) Phase open loop force 6) Measured phase 7) Phase detector error 8) Phase modulator control monitor 9) Gradient set point 10) Gradient loop gain 11) Gradient clamp 12) Gradient open loop force 13) Measured gradient 14) Gradient detector error 15) Gradient modulator control 16) Measured frequency error monitor 17) RF attenuation 18) Mod anode voltage 19) Measured current 20) Measured voltage 21) Measured RF forward power 22) Measured RF reflected power 23) Body current 24) Gap voltage 25) Module temperature 26) Cavity window arc detector 27) Cavity infrared detector 28) Local RF oscillator power level monitor 29) Status register from auto shut down (crowbar) hardware.

An additional important function of the microprocessor in the RF Module is to shut the klystron off in an orderly fashion if the local control computer or the local CAMAC crate controller malfunctions.

Hardware Description: The microprocessor section of the RF module is composed of 3 separate boards: (1) CAMAC Buffer Board, (2) Microprocessor Board, and (3) I/O Board.

The CAMAC Buffer Board resides in the CAMAC crate. The RF Module does not physically include the CAMAC Buffer Board and is located in a separate crate which accommodates Eurocard 6U format. The RF Module and the CAMAC Buffer Board are connected by a 10' shielded ribbon cable. This configuration is described in Fig. 2.

CAMAC Buffer Board: Use of the CAMAC Buffer Board provides solutions to certain limitations caused by the CAMAC environment. The large number of coaxial cables and wires to be connected to each RF Module in combination with the presence of the CAMAC backplane makes the back side of the CAMAC crate very hard to reach. The CAMAC Buffer

*Supported by D.O.E. contract #DE-AC05-84ER40150

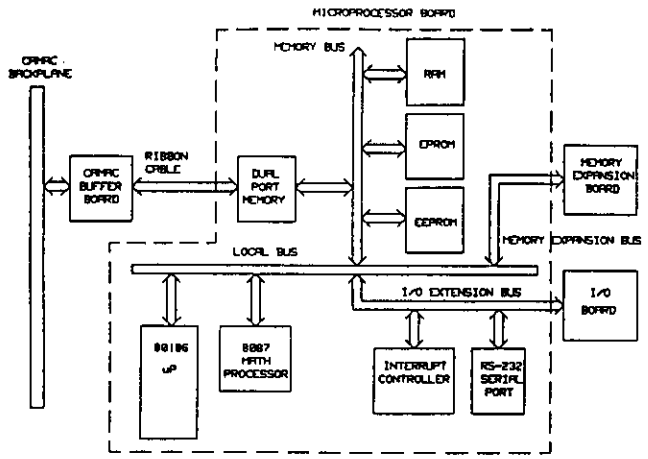

Figure 2: Microprocessor section of the RF control module.

Board permits removal of the RF Control Module from the restrictive CAMAC environment and allows it to be placed in a crate which does not have a backplane, thus offering more access space for cable and wire connections.

The CAMAC Buffer Board enhances efficiency in using the address space of one CAMAC crate controller. If the entire RF Control Module were to be located in the CAMAC crate, it would occupy six slots. Three CAMAC crates and three crate controllers would be required to control eight klystrons which are part of one cryomodule. With the CAMAC Buffer Board in line, the full address space of one crate controller is used to access all eight RF control modules in one cryomodule. This configuration results in considerable savings in CAMAC crates and crate controllers. The control of eight RF Modules by one CAMAC crate controller saves software overhead time that would be required for the local computer to access three separate crate controllers instead of one.

Buffer Board Functions: The CAMAC Buffer Board plugs into the CAMAC backplane. It picks up the S1, S2, N, A1-A8, and F1-F16 date lines as well as 16 "write" and 16 "read" data lines. It returns to the crate controller the Q and X signals. The unidirectional "read" and "write" data lines are converted to one bidirectional data bus. The direction of the data bus is determined by decoding the N and F1-F16 lines. The board is programmed to respond to the "read" functions F0, F1 and to the "write" functions F16, F17. The bidirectional 16-bit data bus, as well as the control lines and common ground are connected to the RF Control Module through a 10' shielded ribbon cable.

Microprocessor Board: The design of the Microprocessor Board is based on Intel 80186 16 bit CPU running at 8 MHz. In its operations requiring high-speed complex calculations, the microprocessor is supported by an Intel 8087 math coprocessor. Communication with the CAMAC Buffer Board is achieved through a 16-bit wide, dual-port memory. Access to dual port memory locations from both sides is asynchronous. Instructions and data are left in these memory locations. One Mbyte of memory space can be covered by the 80186 microprocessor, which is the upgrade version of the 8086 CPU. This memory space can be grouped for different configurations of RAM, EPROM and EEPROM as required by the system. Eight external interrupt lines are connected to the microprocessor through an interrupt controller. Incorporation of a serial port into the circuitry adds the benefit of accessing the CPU through a channel other than CAMAC, when needed. Communication through RS232 would be useful primarily for debugging and calibration purposes.

All the A/D and D/A converter channels are I/O mapped and are extended from the Microprocessor Board to the I/O Board through a ribbon cable.

I/O Board: The I/O Board consists of the A/D and D/A converters as well as a 16 wide bit control I/O. It includes the digital and analog circuitry required to interface the RF chain to the microprocessor. The converters vary in width between 8 and 14 bits. The operation of all the A/D converters is based on the successive approximation method.

Software

Functional Description: The software has three major functions: (1) Assist the hardware control loops. The hardware control loops smooth the fast variations, while the software smooths the slower variations, such as changes due to temperature drift. (2) Interface with the external computers. The interface to the external world is via CAMAC and RS-232. This provides the input commands and values to set the hardware at some particular operating point and the output status and values needed to monitor the RF Module. This is accomplished by compensation algorithms driven from the calibration tables. (3) Perform secondary actions. Some examples of the secondary tasks are: download external hardware calibration tables, configure for use in the LINAC or in the injector, monitor klystron degradation, and assist debugging.

Benefits

The distinct benefits of an embedded processor are:

- The hardware module appears more ideal. The embedded processor can hide complex functionality from the external controlling computer and thus create an ideal black-box interface. For example, the setting of one particular parameter may actually involve writing to five DACs; the external computer need concern itself only with that one parameter and not the individual DACs. In addition, the use of calibration compensation gives the appearance that this whole hardware module is ideal.
- The module is easier to use. A further example is the occurence of a set of interdependent parameters that are to be controlled singly. The external computer need only vary one of these parameters, and consequently the embedded processor will handle all of the interactions necessary to keep the other parameters constant.
- The burden on the external control computer is reduced. Because much functionality is in the embedded processor, the external computer has fewer hardware details to control. Its time can be spent more on upper level control items.
- The hardware and its operation are more modularized. The module can be treated as an independent unit because of this increased functionality and because the local calibration tables are stored in this module. To further increase modularity, hardware and software revision histories can be stored locally, and the embedded processor can assist the external test-stand with setup calibration and maintenance diagnostics.

Design and Implementation

The software will be written in C language, along with some assembly code where required (mainly for the boot-up process and the DAC/ADC drivers). Modular design techniques will be used, such as a tree design (start general and

proceed to the details in stages), a liberal use of subroutines, a common set of routines to be used by all the tasks, universal routines that are table driven, and the use of documentation to drive the coding. This last point assures usable and accurate documentation, which is important for future additions and maintenance.

The software architecture is based on the three major functions described in the function description. The details of the interface to the external computer (via CAMAC) are handled by the hardware. The software simply treats this CAMAC interface buffer as normal memory (memory mapped). The other two functions (assist control loops and secondary actions) are alternately time sliced by a simple operating system (OS). To achieve stable performance of the control loops, the control loop function is periodically activated via a locally generated interrupt command. Therefore, no matter how much the secondary actions load the processor, the control loop will function as usual. The time slice from the end of the control loop action to the next interrupt is devoted to the secondary actions.

A combination of standard development techniques will be used. A pair of the external control computers will be used in the initial development. One of the computers will function as the real external controller, but with the CAMAC interface routine replaced by a local area network (LAN) interface routine. A matching LAN routine will exist on the other computer, which is to function as the RF Module processor. All code that has no direct hardware interface and that is not time critical can be developed with this setup. This allows development before the hardware is ready. It also allows the external controller algorithms to be developed without the hardware, as long as the hardware interaction is emulated well enough. Next, more detailed work can be done on the target microprocessor development system. This system can be used in a non-hardware mode, or with the real RF Module hardware while emulating only the microprocessor. This last mode is required for critical timing and hardware debugging.

Conclusion

The concept of an RF control module which includes all necessary circuitry and calibration data in one integral package facilitates the task of tightly controlling RF parameters. The embedded microprocessor allows the RF Module to be an ideal hardware unit in the sense that one module cannot be distinguished from another, even though the individual components have slightly different characteristics. Calibration compensation takes care of these differences. It is ideal also in the sense that complex and interactive operations can be hidden from the external controlling computer, thus making the RF Module easier to use.