CEBAF-PR-89-006

BEAM TRANSPORT MAGNETS FOR CEBAF

L. H. Harwood, G. Biallas, J. R. Boyce
W. Heilbrunn, K. Johnson, and R. C. York
Continuous Electron Beam Accelerator Facility
12000 Jefferson Avenue
Newport News, VA 23606

CONTINUOUS

ELECTRON

BEAM

ACCELERATOR

FACILITY

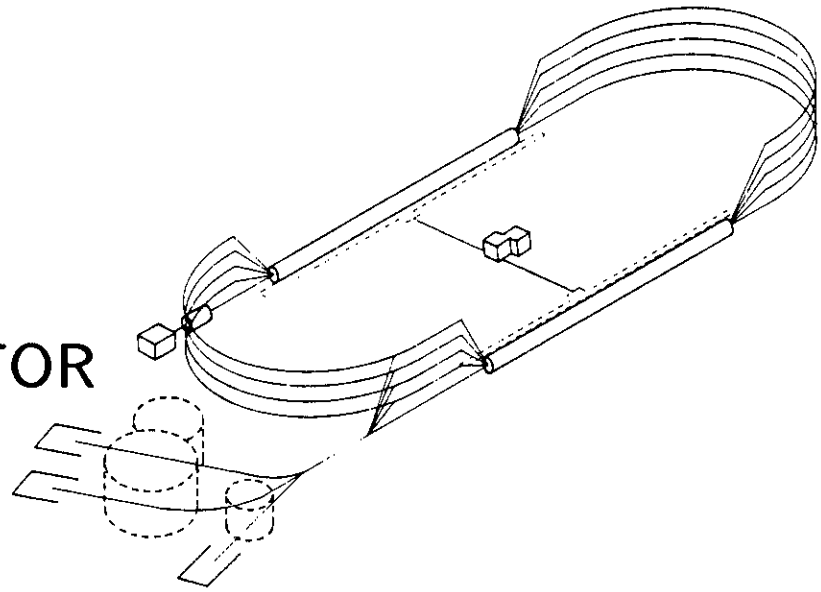

SURA SOUTHEASTERN UNIVERSITIES RESEARCH ASSOCIATION

CEBAF

Newport News, Virginia

BEAM TRANSPORT MAGNETS FOR CEBAF*

L. H. Harwood, G. Biallas, J. R. Boyce,
W. Heilbrunn, K. Johnson and R. C. York
Continuous Electron Beam Accelerator Facility
12000 Jefferson Avenue
Newport News, Virginia 23606

Abstract

With respect to the optical system, the challenging parameters of the Continuous Electron Beam Accelerator Facility (CEBAF), a five pass recirculating electron linac, are the design goals for the emittance and energy spread of its beam. The design goals are an emittance of 2×10^{-9} m-rad at E < 1 GeV and an energy spread of $\Delta E/E$ (4σ) of 10^{-4}. The nominal operating energy range of the machine is to be from 0.5 to 4 GeV. The optics to make this possible have been developed and are presented by other participants at this conference. The magnetic elements specified by the optics design are not, in general, extraordinary. There are, however, many magnets: 1047 corrector dipoles (ℓ = 0.15 m, 0.3m; $B_0 \leq 0.8$ kG), 390 major dipoles ($\ell = 1, 2, \& 3$ m; $2 \leq B_0 \leq 6$ kG); 707 quadrupoles (0.15, 0.30, 0.6 m; $B_0 \leq 4$ kG), 96 sextupoles ($\ell = 0.3$ m, $B_0 \leq 0.2$ kG), 26 septa ($\ell = 1, 2$ m; $0.3 \leq B_0 \leq 6$ kG), and one lambertson septum ($\ell = 1m$; $B_0 \simeq 4$ kG), for a total of 2267 individual magnets. Furthermore, the fact that the quadrupoles, sextupoles, and correctors are to be individually powered to provide flexibility in tuning the optics lattice leads to restrictions on their design parameters. To ensure that the required magnetic parameters are achieved, all magnets will be magnetically mapped before installation. Therefore, systems to accurately and rapidly measure the multipoles and major dipoles are required. In this paper, present planning and the results of tests performed on the system to date are outlined .

Arc Dipoles

The primary dipole magnets in the system provide the bending for the recirculation arcs. The optics for the arcs are based on second-order achromats with four super periods in each 180 degree arc. There are from 16-32 dipoles per arc with a bend angle per dipole of 5.6250-11.250 degrees. To minimize degradation of beam emittance due to synchrotron radiation the optics design limits the field to 0.45 T. In order to better match the magnets to their local requirements, three different lengths (1, 2, and 3 m) of the same cross-section will be used. The cross-section is shown in Fig. 1. By adjusting the total magnet length in an arc, the required dynamic range of the magnetic field is reduced to a factor of three for the nominal extracted energy range.

As illustrated in Figure 1, the dipoles will have a "C" configuration to simplify installation of the vacuum system and any subsequent maintenance. The open side also makes the magnetic measurement task (see below) easier for these magnets. To simplify production, rather than follow the beam curvature, the magnets are rectangular with a good field width specified by the sagitta and an additional 2.5 cm of width to accommodate orbit displacements from the nominal beam position. The good field region is defined by the region where the deviation from the central field is less than 0.1%. These requirements lead to a pole width of 11.8 cm for our 2.5 cm gap. POISSON[1] studies and measurements on a pre-production unit show that, for the low field levels required, there is no compromise in field quality relative to the performance of an "H" magnet.

As CEBAF is a DC machine, solid, i. e., non-laminated, magnets are an option. A cost analysis indicated that a major cost savings could be realized with non-laminated magnets in lieu of laminated. To meet the optics requirements, the $\int$Bdl can only vary from magnet-to-magnet within an arc by 0.1% . Data from the SPEAR[2] ring magnets indicate that this is possible on large production runs of non-laminated magnets. Tests at CEBAF on a pre-production magnet have shown that required mechanical tolerances can be met. Furthermore, non-laminated magnets reduced the effects of power supply ripple when compared to laminated ones. Measurements on a pre-production non-laminated magnet show a factor of 7 damping of the ripple at 60 Hz and a factor of 20 at 360 Hz. This damping reduces the requirements on the ripple specification of the power supplies. Dipoles within a single arc will be powered in series; this will ensure that any residual field ripple will be correlated from magnet-to-magnet. When combined with the second-order achromat lattice, the product of field error and betatron phase will have a net zero integral over the arc. At this time, the remaining question is whether the magnets can be made to reproduce their fields to 0.01%. Clearly this is possible for a single magnet with NMR based regulation. A controlled cycling procedure is under study to guarantee the reproducibility of magnet-to-magnet differences.

The coils will be made of hollow-core copper conductor which will be water cooled. The required 40 turns of 9.5 mm square conductor will be split into four, 10-turn double "pancakes" with a current at 0.45 T of 225 A. Each "pancake" can then be mounted to the iron core by slipping it through the gap, thus permitting simple replacement of a damaged coil.

Quadrupoles

The quadrupoles have the broadest range of requirements. At 4 GeV the $\int$Bdl ranges from .0075 T-m to .21 T-m for 2.5 cm diameter apertures. Each of these magnets must operate at one third of these values because of the energy range of the machine. Clearly it would be difficult for a single design to cover this range of a factor of almost 100. The total range has

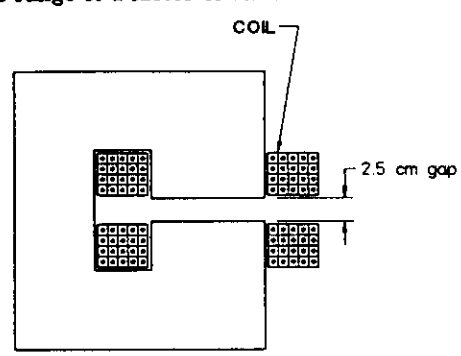

Figure 1: Cross-section of primary beam transport dipole. Magnets with this cross-section and lengths of 1, 2, and 3 m will be used.

* This work was supported by the U. S. Department of Energy under contract DE-AC05-84ER40150

been separated into a few regions: 1) the injector and first linac, 2) the second linac, and 3) main arc quadrupoles. The main arc quadrupoles are further separated into three sets to keep peak and minimum fields tractable.

The optics design of the machine calls for independent tuning of each quadrupole. Power supply and cabling costs then require that the magnets operate at low current. This leads to air-cooled or indirectly water-cooled coils. Consequently the current density is limited to small values (< 2 A/mm^2), which finally leads to large coils given the fields and apertures required.

The primary consideration for the magnets of the injector and first linac stems from their very low fields. Even though they are only 15 cm long, the fields are only 25 G, at the front end of the machine. At such low levels, remnant fields in the iron are clearly a major contributor to the field. This is particularly true for field errors which would arise from pole-to-pole asymmetries in the remnant field. Utilizing a Panofsky (3) design, the field in the iron can be much more than the field would have been in a conventional design, thereby reducing the net effect of the remnant field. The iron is also farther from the aperture, relative to a pole-tip magnet, further reducing the effects of the remnant field. There is a cost trade-off for additional amp-turns and power, since this style magnet requires twice the amp-turns of a pole-tip magnet. The classic Panofsky magnet has very complicated end turns which are very costly to manufacture. Because of the scale of these magnets, it is possible to greatly simplify the coils by returning the current around the outside of the magnet at the cost of extra power. This leads to the design shown in Figure 2.

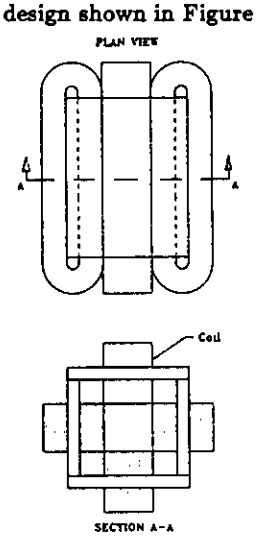

Figure 2: Cross-section and plan view of a back-leg wound "Panofsky" quadrupole.

Present plans call for the use of 1006 or 1008 iron. The coils will be wound separately and then placed around each of the four sides. During pre-assembly a fixture will hold the parts in precise relative positions as the top, bottom, and sides are bolted together. The interface between the top and sides will be drilled and pinned while still in the fixture to permit precise reassembly in the field. Survey tooling will also be installed. The pole field of a Panofsky quadrupole is limited by current density in the following way:

$$B_{\text{pole}}\,(T) \;=\; \frac{2.5 \times 10^{-4}\; N \cdot I \cdot R}{R^2 + NI/2j}$$

where: R=pole radius, NI=amp turns, j=amp/m^2.

For non-water-cooled magnets, current densities of about 1 A/mm^2 or less are typically preferred. Because of the increase of the resistivity of copper at higher temperatures, higher densities lead to power increases becoming nonlinear with the square of the current. At locations where the pole field exceeds the air-cooled limit, indirect water cooling will be applied by attaching water cooled plates to the return portion of each coil.

As with the dipoles, field ripple is a concern. The non-laminated construction will enhance eddy currents thus damping field ripple that would otherwise be induced by power-supply ripple. However, unlike the dipoles, the quadrupoles will not be powered in series, thereby losing the advantage of correlated betatron phase and field error. The field ripple will be further damped on these magnets by including a copper circuit (either a sheet or wire) to provide a circuit for the eddy currents.

The majority (650) of the quadrupoles exceed the fields available with indirectly cooled coils of a Panofsky quadrupole. Even so, the $\int$Bdl never exceeds 0.25 T-m for an aperture of 1.2 cm radius. For these a more standard iron-pole design is planned with a pole field ≤ 0.4 T. Field studies with POISSON indicate that the canonical hyperbolic pole can be extended a relatively large distance without inducing saturation effects. Since current density limitations presented a major design limitation, both air-cooled and indirectly water-cooled magnets of three different lengths, but of the same cross section, will be used to meet the large required range. The 96 sextupoles needed will be modified versions of the quadrupoles.

Sufficient precision at acceptable cost is estimated to be achievable only with assembly from laminations. The magnet cross section is shown in Figure 3. A single lamination will be of one quadrant. Laminations will be stacked into 2.5 cm thick packs; while still under pressure in the stacking fixture, the stacks will be welded together. Precision assembly of the quadrants into a complete magnet will be aided by guides in the mating surfaces of each lamination. The quadrants will be held together by bolts passing through non-magnetic bars which press on surfaces provided on the exterior of each lamination. Alignment fixtures will be attached to stainless steel pins permanently inserted in holes in the return leg of the lamination. Costs are thus reduced, as only the inexpensive pins remain with the magnet instead of relatively expensive tooling balls; even the cost of installing bushings to receive removable tooling balls is saved.

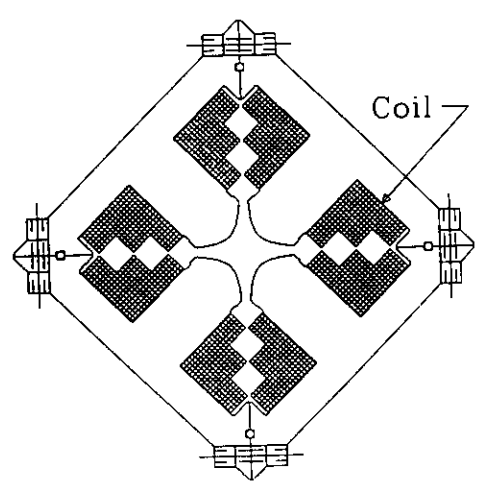

Figure 3: Cross-section of primary beam transport quadrupole.

Corrector dipoles

A single design for all 1047 corrector dipoles will be used. In cross-section it is a simple back-leg wound window- frame design as shown in Fig. 4. A variation on "standard" designs has been chosen which maximizes the effective length of the magnet for a given coil length. The iron of the top and bottom is extended to cover the ends of the coils, as shown in Figure 4, instead of letting them extend beyond the iron. This is possible because the magnets have a sufficiently low field (< 0.08 T) that the iron does not approach saturation even in the sides where the flux is concentrated to much higher levels.

Magnetic Measurements

The optics specifications require magnetic measurement of all magnets at varying levels. The correctors need only be measured to about 1%. The $\int Bdl$ for the arc dipoles are to be measured to 0.01% at several field levels. In the multipoles, the fundamental field component is to be measured to 0.1%, the other multipoles are to be measured to better than 0.01% of the fundamental. In general, the procedure will be to measure a sample of each type magnet in detail and then relate the differences observed between magnets of the same type to obtain sufficient precision quickly. Three measurement procedures will be used:

Quadrupoles and sextupoles: A rotating coil has been chosen to analyze the integral fields of the multipoles. The signal from the coil will be fed to a precision bi-polar voltage-to-frequency (v/f) converter[4]. The signals from the v/f and a precision (0.001°) angular encoder will be fed to CAMAC scalers which will be read at about 100 angles. At a series of current levels a standard magnet will be measured with a coil as prescribed by Halbach[5]. First the fundamental field component will be measured. Bucking coils will then be included in the circuit in order to eliminate the dipole and quadrupole signals and thereby permit the gain of the v/f to be increased markedly. Small high-multipole components will then be measurable in the presence of much larger fundamental components.

After detailed measurement of the standard magnet, all magnets will be precisely related to it by measuring each magnet, including the standard relative to a reference magnet. The magnet under study and the reference magnet will be powered in series; coils will be inserted into the two magnets and rotated simultaneously. The coils in the two magnets will be in opposition so that the net voltage is due to the differences in the two magnets thereby enhancing the data precision. Use of the "reference" magnet will give precise field differences and remove sensitivities both to precise current setting and to ripple. The excitation curve should be measurable in under two hours per magnet.

Correctors.– The first correctors will be studied with rotating coil to determine the integrated product of field and length. The remaining magnets will be tested with a Hall probe reading at the magnet centers at several field levels and these values will be combined with the initial integral measurements to get the field integral for each magnet. This data will be passed to the control system database. Each measurement should take less than 30 minutes.

Dipoles.– The wide poles of these magnets preclude a rotating coil measurement. A wire moving in the median plane can measure the field profile much more efficiently. As with the rotating coil, the induced voltage is fed to a v/f as the wire is moved. The wire movement is monitored with a pair of precision linear transducers. The data are fed to CAMAC scalers which are latched and read at 1 mm intervals. A flux versus position profile is thus determined with 1 mm spacings. Again, as with the quadrupoles, the production dipoles will be measured relative to a reference magnet in order to increase precision and reduce systematic effects in the field differences. We will also standardize the magnets' temperatures by circulating temperature-controlled low-conductivity water through them for 12 hours prior to the measurement. The magnet measurement system has been sized to accommodate all beam transport magnets for stand-alone measurement and for reference measurements for the main beam transport magnets. A two-hour time period is anticipated to be sufficient for the difference measurements of each dipole.

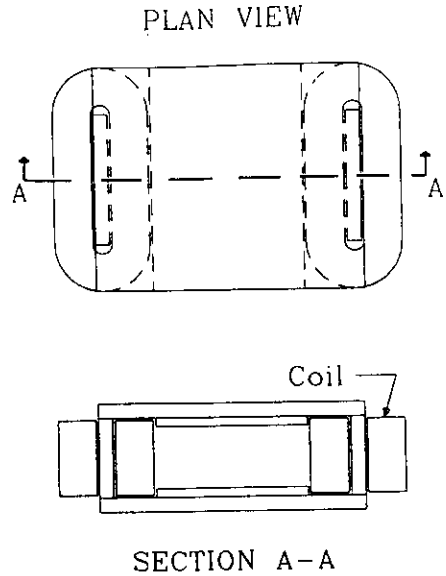

Figure 4: Cross-section and plan view of corrector dipole.

Alignment information for the multipoles and dipoles will be gained by comparison of the fields. The field distributions will be coupled to position by mounting the magnets onto the measurement hardware relative to the survey points.

Summary

The large number of precision magnets needed for CEBAF provides a logistical, measurement, and cost-minimization challenge. At present, pre-production units of all magnet types are being measured or procured. The measurement systems for the production magnets are being constructed. Installation in the accelerator tunnel will begin in 1990 and extend through 1994.

References

1. R. Holsinger, private communication.
2. J. Cobb, private communication.
3. Hand and Panofsky, "Magnetic Quadupole with Rectangular Aperture," Rev. Sci. Inst., vol 30, pp.927-930, October, 1959.
4. Hearn, et al, "A Precision Programmable Bipolar V/f Instrumentation Module," LBL Report LBL-13417, 1981.
5. K. Halbach,"The Hilac Quadrupole Measurement Equipment," LBL engineering note, 1976.