CEBAF-PR-89-005

MODULAR MAGNET CURRENT REGULATOR

Nick Dobeck, George Burtner, Omar Garza, Robert LaMora
Continuous Electron Beam Accelerator Facility
12000 Jefferson Avenue
Newport News, VA 23606

CONTINUOUS

ELECTRON

BEAM

ACCELERATOR

FACILITY

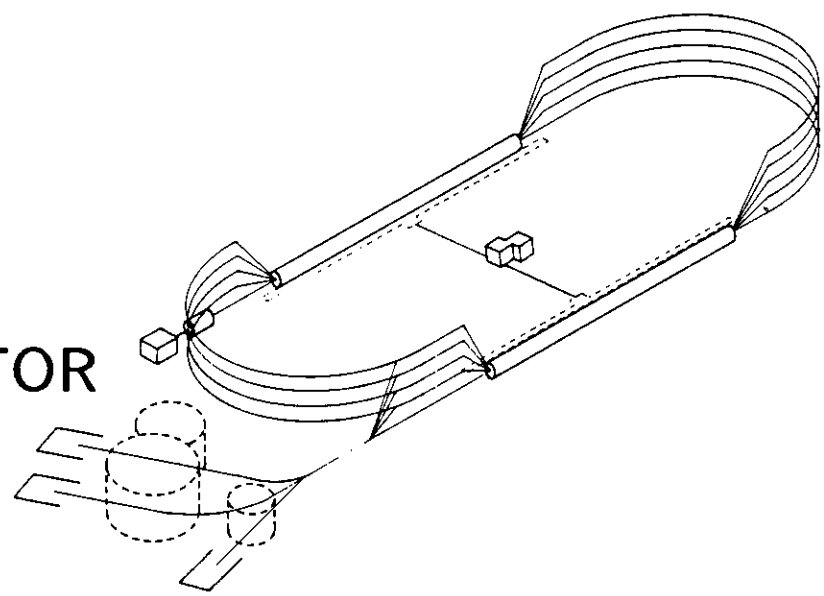

SURA SOUTHEASTERN UNIVERSITIES RESEARCH ASSOCIATION

CEBAF

Newport News, Virginia

MODULAR MAGNET CURRENT REGULATOR*

Nick Dobeck, George Burtner, Omar Garza, Robert LaMora

Continuous Electron Beam Accelerator Facility
12000 Jefferson Avenue
Newport News, VA 23606

Abstract

A modular current regulation system is being developed to power the low current correction and focusing magnets used for beam transport. The system consists of numerous multi-channel assemblies, each housed in a standard relay rack. Each multi-channel assembly consists of common power supplies, CAMAC control modules, and Eurocard cages for the current regulators. These regulators are linear, bipolar modules capable of parallel connection for higher current output.

Introduction

The CEBAF beam transport magnet system contains as many corrector and focusing magnets that will be driven by low power current regulators capable of .01% stability and ripple. The required power ranges are from 200 watts for the corrector magnets to approximately 800 watts for quadrapole focusing magnets in the high power arc sections of the accelerator. A system is being designed which uses common modules that can be applied throughout the accelerator. The basic power supply assembly consists of a relay rack containing the necessary equipment to handle 32 of the standard 200 watt current regulator modules. Higher power requirements are handled by paralleling regulator units. CAMAC power supply controller modules are located in a nearby rack.

System Configuration

The block diagram of a typical system is shown in Figure 1 and the rack layout is detailed in Figure 2. Because approximately 80 of these assemblies are required, considerable standardization is possible in rack wiring, component use and documentation.

The AC power wiring is the same in each of the power assemblies. The bulk power supplies, which are common to all the regulator channels, are fed with 208 VAC, 3 phase. The DC wiring in a particular system is dependent on the configuration and current needs of the magnets.

The regulator modules are housed in Eurocard cages with custom backplanes. The special backplane allows an eight channel CAMAC power supply controller to be plugged into a backplane handling eight regulators. This minimizes per channel costs for CAMAC control modules and cabling. Four Eurocard cages are needed to hold the full complement of 32 regulator modules.

Although only the corrector magnets require bipolar regulators, all of the power supply systems will have this capability. This will allow the entire range of power needs to be handled by one basic module. Having only one basic regulator module will keep the initial development costs down, make the configuration of the systems very versatile, reduce the number of types of spares in inventory, and make maintenance much easier.

System monitor and control is handled by eight channel CAMAC power supply controller modules located in a nearby rack. Each of the eight channels has a 12 bit DAC for the command reference, a 12 bit ADC to monitor the voltage developed across a shunt resistor, a control bit to turn the regulator on, and a status bit to indicate when the regulator is ready. Both the ADC and DAC signals will be run on twisted, shielded pair wires. Further noise reduction is achieved by using differential line receivers. Note that although a regulator must have stability to 100 ppm (parts per million) over eight hours, it is only required to have 12 bit resolution so that a stable 12 bit DAC can be used rather than having to use a 14 or 16 bit DAC.

Although the power supply is nominally designed for 32 channels, it can be configured in various ways depending on the required load power. A given eight slot Eurocard cage can be set up with the nominal eight, 200 watt regulators powering eight independent loads. At the other extreme it can be configured with two groups of four regulators in parallel driving two magnets, each requiring 800 watts.

Bulk Power Supply

The bulk power supply converts 208 VAC 3 phase to the required DC levels. To keep the weight of this unit within reason, it has been designed to furnish enough power for 16 current regulators. Thus two bulk power supplies are needed to fully power 32 regulator channels. The bulk power supply furnishes approximately +20 VDC and -20 VDC at 160 amperes with a ripple of less than 5 millivolts.

Regulator Module

A simple circuit diagram of the 200 watt master regulator module is shown in Figure 3. Amplifier U1 accepts an analog command signal from a CAMAC DAC module. U1 then converts this signal to an on-board reference. The differential input of U1 serves to cancel common mode ground noise which will likely exist between the regulator and the CAMAC DAC output. The output of U1 drives the positive input of amplifier U2.

U2 is the summing amplifier of the control loop and provides the summing junction for the reference and feedback signals. This amplifier also furnishes most of the open loop gain for the control loop. The output of U2 provides a drive signal for the on-board power stage as well as any external slave cards.

The regulator's power section consists of Q1 and Q2. Positive output current flows through Q1, an NPN transistor, while negative output current flows through Q2, which is a PNP de-

* This work was supported by the U.S. Department of Energy under contract DE-ACO5-84ER 40150.

vice. Much of the available volume of the Eurocard module is taken up by the heat sink for Q1 and Q2.

The output current flows through a magnet and into a shunt resistor which is tied to the power supply return leg. The shunt resistor is a precision four lead device which is externally mounted to the card cage backplane. The load current flowing through the shunt provides a voltage signal to the input of U3 and U4. Amplifier U3 scales the shunt voltage which is then fed to the summing junction of U2. The gain of U3 is set so that the regulator circuit produces full scale current output in response to a full scale command signal from the DAC. U3 is configured as a differential amplifier to minimize common mode noise from the externally mounted shunt resistor. The output of U4 also provides a buffered monitor signal to a CAMAC ADC channel.

The 15,000 microfarad capacitors are used to minimize the effect of line transients and to further reduce any 360 Hz ripple from the bulk power supply.

Summary

A straight forward and versatile power supply system has been designed to drive the lower power corrector and focusing magnets in the accelerator beam transport system. A simple bipolar regulator module furnishes 200 watts with loads to 800 watts handled by paralleling up to four modules. Current ripple is 100 ppm of full scale with stability of 100 ppm over eight hours. Common bulk power supplies furnish power for the regulators. Monitor and control of the regulator channels is provided by CAMAC power supply controller modules. One status bit and one control bit are provided for each regulator.

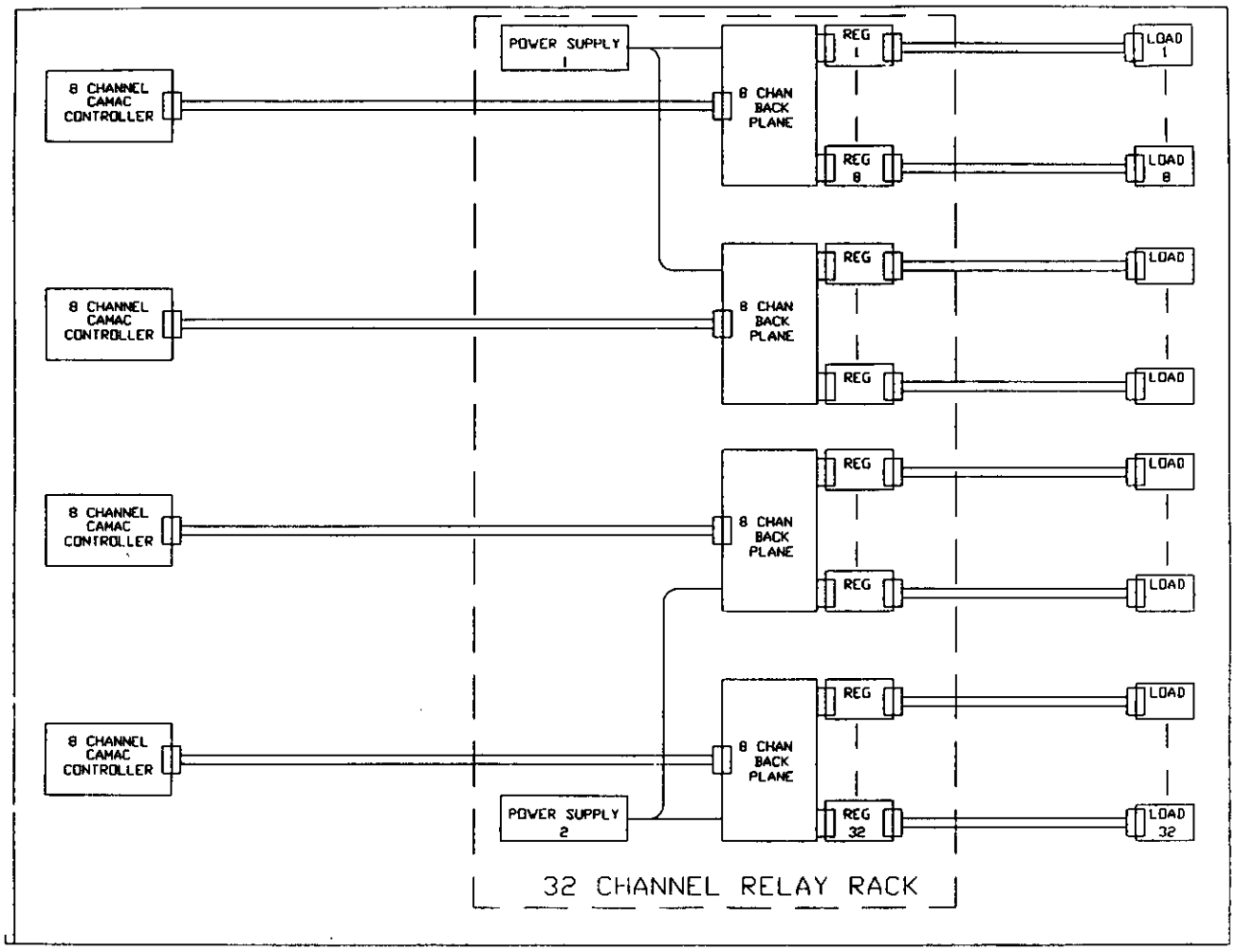

Figure 1: 32 Channel Relay Rack

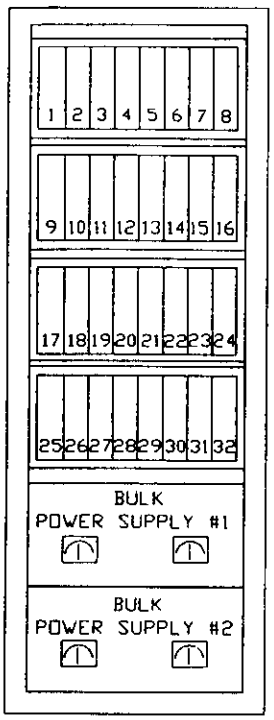

Figure 2: 32 Channel Relay Rack

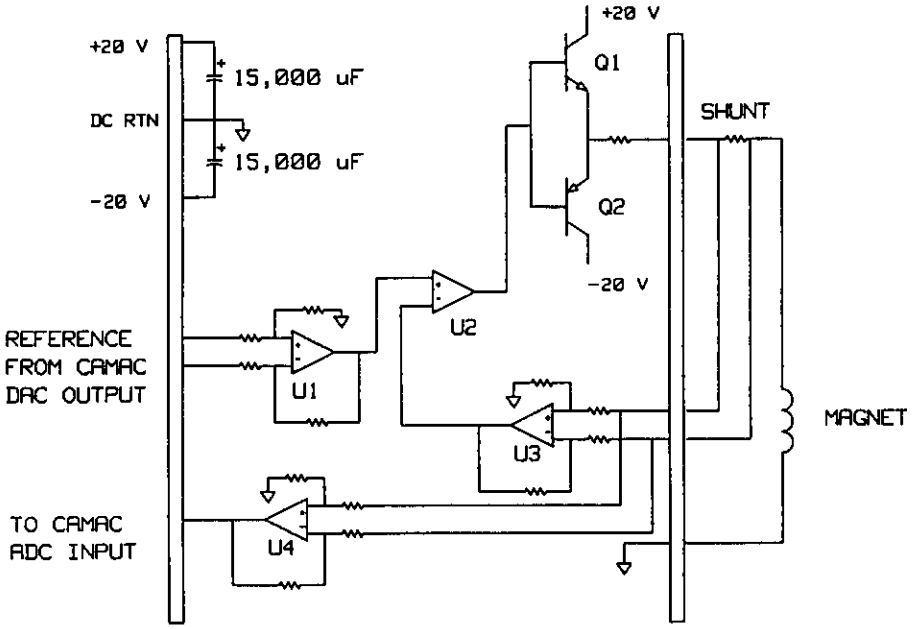

Figure 3: Regulator Module