CEBAF PR-88-016

ANALOG TECHNIQUES IN CEBAF'S RF CONTROL SYSTEM

C. Hovater and J. Fugitt
Continuous Electron Beam Accelerator Facility
12000 Jefferson Avenue
Newport News, VA 23606

CONTINUOUS
ELECTRON
BEAM
ACCELERATOR
FACILITY

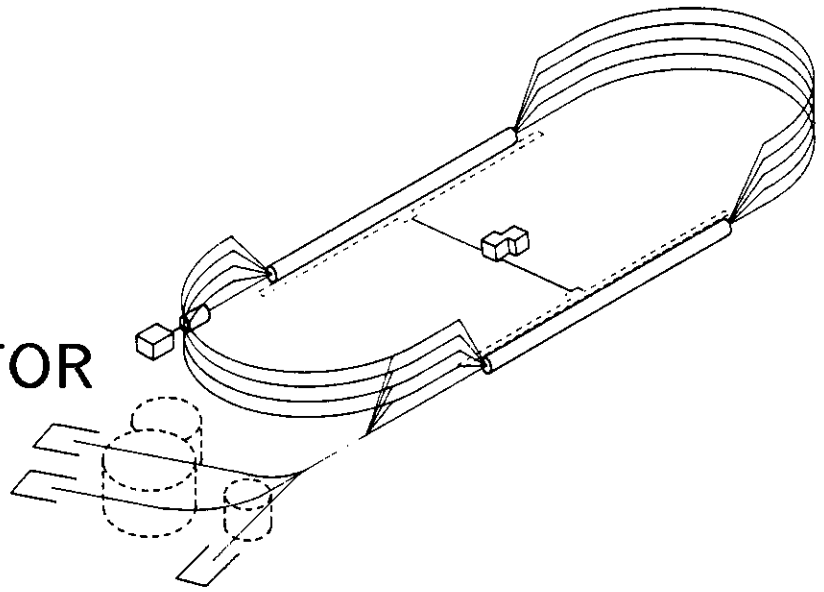

SURA SOUTHEASTERN UNIVERSITIES RESEARCH ASSOCIATION

CEBAF

Newport News, Virginia

ANALOG TECHNIQUES IN CEBAF'S RF CONTROL SYSTEM

Curt Hovater and Jock Fugitt
Continuous Electron Beam Accelerator Facility*
12000 Jefferson Avenue, Newport News, Virginia 23606

Abstract

Recent developments in high-speed analog technology have progressed into the areas of traditional RF technology. Diode-related devices are being replaced by analog IC's in the CEBAF RF control system. Complex phase modulators and attenuators have been successfully tested at 70 MHz. They have three advantages over existing technology: lower cost, less temperature sensitivity, and more linearity. RF signal conditioning components and how to implement the new analog IC's will be covered in this paper.

Introduction

The CEBAF RF group has concluded that present RF technology is dated and expensive. One solution under consideration is the use of high-speed analog IC's, which have already been integrated into many typical RF circuits. Many companies are now producing devices that operate well into the RF realm (500 MHz). In the CEBAF RF control system we plan to use this analog technology for the cavity phase and gradient control, which over short periods of time will be regulated to 0.3° and 1×10^{-4} respectively.

The superconducting cavity freqency of 1497 MHz is heterodyned down to a popular IF frequency of 70 MHz, at which all of the signal processing is done.[1] This frequency was chosen on the premise that VHF components offer higher accuracy at reasonable prices. While many companies can provide accurate devices, the cost is much more than we have budgeted. This becomes self-evident when considering that CEBAF is building 400 control systems and costs must be kept down. An example is the complex phase shifter; we have not found a company to produce one under $200. Prices like this are what led us to look for alternate technologies. In doing so, we have built and tested a complex phase shifter using two $15 IC's, which for a prototype is extremely accurate and economical. The success of our device has encouraged us to rethink our position on RF components and begin looking for vendors to build our own designs.

Diode Devices

The basic building block of any RF system is the mixer, which is primarily used as a frequency converter but can also be used to make other components such as attenuators, phase shifters, and phase detectors. These components have posed a real challenge for CEBAF. The typical double-balanced mixer consists of a diode ring and two transformers as shown in figure 1. When used as frequency converters, mixers work well across wide bandwidths, but for other components the nonlinearity of the diodes becomes apparent. While there are ways to overcome this problem, most approaches tend to be costly. Our solution is to replace the typical RF mixer with the analog equivalent, the four-quadrant multiplier or modulator.

Gilbert Cell

The circuit behind the modern analog multiplier is the Gilbert cell. In its simplest form, the Gilbert cell is a variable transconductance multiplier that has compensating diodes (figure 2).

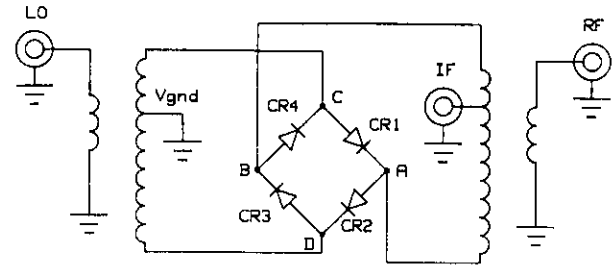

Figure 1 Double Balanced Mixer with Diode Ring

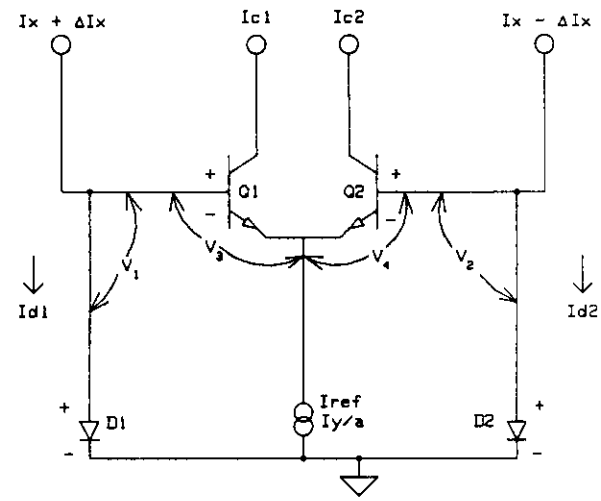

Figure 2 Linearized 2-Quadrant Multiplier

Gilbert's solution was to use the logarithmic properties of diodes (or diode-connected transistors) to compensate for the exponential nonlinearity of the base inputs[2]. The input current across the diode creates a voltage proportional to log of current.

$$V = (kT/q)\ln(I_d/I_{es}) \tag{1}$$

I_d = current across diode
I_{es} = emitter saturation current

Since the collector currents are exponentially related to the base-emitter voltages

$$I_c = I_{es} \cdot \exp(qV_{be}/kT - 1) \tag{2}$$

It is reasonable to assume that the logarithmic input will cancel the exponential nonlinearity of the transistor. This implies a linear relationship between the diode currents and the collector currents.

* This work was supported by the U.S. Department of Energy under contract DE-AC05-84ER40150.

$$I_{d1}/I_{d2} = I_{c1}/I_{c2} \tag{3}$$

The elegance of this relationship is that there is no dependence on temperature or current magnitude.

For simplicity the circuit we have described is the two-quadrant multiplier. It has bipolar X input and unipolar Y input, hence two quadrants. Most multiplier IC's are four-quadrant (bipolar inputs), the only difference being that compensating diodes have been replaced by diode-connected transistors. The transfer function of the four-quadrant multiplier reduces to the equation

$$H = A \cdot Vx \cdot Vy \tag{4}$$

where A is the scaling factor.

Multiplier Uses

The many uses of the multiplier become obvious when looking at the transfer function.

$$H = X \cdot Y \tag{5}$$

Examples are the frequency converter, attenuator, and phase detector. Using simple trigonometric identities all three RF components can be realized.

Attenuator: $X = A\sin(\omega t)$ and $Y = B(v)$ where X is the input signal to be modulated and Y is the modulating voltage.

$$H = AB(v)\sin(\omega t) \tag{6}$$

Frequency Converter: $X = \sin(\omega t)$ and $Y = \sin(zt)$ where ω is the RF and z is the LO frequency.

$$H = 1/2(\cos(\omega t - zt) + (\cos(\omega t)\cos(zt))) \tag{7}$$

The high-frequency signals are easily filtered out.

Phase Detector: $X = \sin(\omega t + \theta)$ and $Y = \sin(\omega t)$ where θ is the phase difference.

$$H = 1/2(\cos(\theta) - \cos(2\omega t + \theta)) \tag{8}$$

Again the high-frequency signals are filtered out.

Based on these functions most signal processing components can be built.

CEBAF Signal Processing Components

The simplest circuit to observe is the level modulator/linear attenuator which is used for cavity gradient control, and in the complex phase shifter. Using the Analog Devices AD834 we were able to match input and output impedances using 4:1 and 3:1 (center-tapped) transformer ratios respectively.

CEBAF Level Modulator

Frequency:	50-100 MHz
Attenuation:	0-25 dB
Control voltage:	0-1 Vdc
Modulation bandwidth:	5 MHz
VSWR:	1.35:1
RF level:	+10 dBM
Insertion loss/gain:	−1 dB to +1 dB

Because of the increased linearity, amplitude control of 1×10^{-4} will be easier to achieve. Having made a "linear" attenuator one can now produce a very accurate complex phasor modulator, CPM.

CEBAF Complex Phasor Modulator

Frequency:	70MHz
Insertion loss:	−7 dB
Control voltage:	±1 Vdc
VSWR:	IN 1.3:1 OUT 1.4:1
Phase accuracy:	±0.5°
Level shift:	±0.2 dB
RF level:	+10 dBm

The CPM provides 360° of continuous phase adjustment and is used as the master phase reference for the superconducting cavities. A typical CPM (figure 3) consists of a 90° hybrid that splits the signal into inphase "I" and quadrature "Q" components. Two level modulators with I and Q control voltages: $V(i) = A\cos\theta$ and $V(q) = A\sin\theta$, where θ is the desired angle and a power combiner to sum the two signals. The output can be seen by mathematically stepping through the circuit.[3]

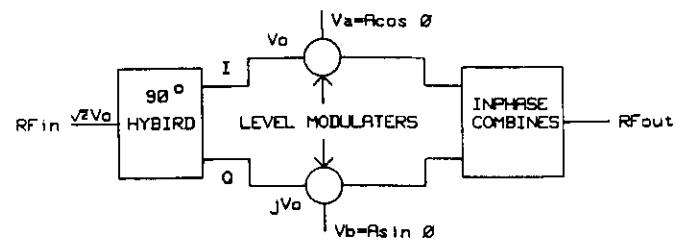

Figure 3 Complex Phase Modulator

Given an input voltage = $SQR(2)V$ this reduces the V_o and jV_o after the 90° hybrid. The linear attenuators A and B modulate the two signals further.

$$V_a = V_o A\cos\theta \text{ and } V_b = jV_o A\sin\theta \tag{9}$$

Combining the two signals gives the following:

$$V_{iq} = (V_o A/2)(\cos\theta - j\sin\theta) \tag{10}$$

which reduces to

$$V_{iq} = (V_o A/2)\exp -j\theta \tag{11}$$

The CPM should plot a circle (figure 4a) as seen on the polar chart on a network analyzer. The shape of the curve is largely due to the attenuators. If the multiplier adds a nonlinearity to the signal, e.g., one that varies with control current, the CPM output may look rectangular (figure 4b). This is a common occurrence when using a diode-ring mixer for the attenuator (figure 1). While this can be fixed using EEPROM with a look-up table for each angle, it can become memory expensive when looking at 3600 data points. Since our goal is to control each accelerating cavity to 0.3°, the analog CPM would need only a small program to control it to this accuracy. We plan to drive the CPM using eight- and twelve-bit DACs, from a local microprocessor, so it also helps that multipliers are voltage devices.

The CEBAF CPM uses a Mini-Circuits 90 hybrid, two AD 834's as linear attenuators, and a center-tapped transformer. The center-tapped transformer provides two functions: it sums the output RF and supplies forward bias to the Gilbert cells.

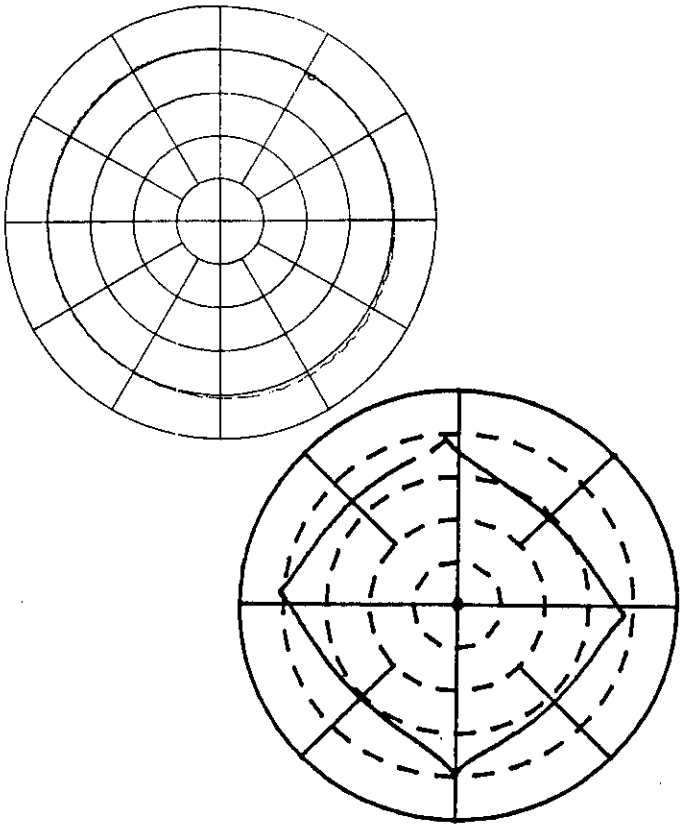

Figure 4a and 4b Polar Phase Plots

CEBAF Fast Phase Detector

Frequency:	70 MHz
VSWR:	1.35:1
Isolation:	35 dB
Output voltage:	±0.5 V
Bandwidth:	1 MHz
Power level:	10 dBm

In order to make extremely accurate phase adjustments in the CEBAF accelerator, one has to be able to detect the phase shifts. As noted earlier the multiplier is also a phase comparator. The circuit now has two impedance-matched inputs and a differential amplifier on the output.[4] This is also a basic circuit for a frequency converter where output bandwidth is determined by the differential amplifier.

Comparing the outputs of the multiplier to a diode-ring mixer (figure 5), using a 70 MHz phase modulated signal (100 kHz sinusoid), we can make two conclusions. The multiplier has better signal reproduction and greater isolation between the RF ports and IF port. These two traits make multipliers perfect as phase detectors for phase lock loops (PLL). Our intention is to use the multiplier for this purpose in the fast phase feedback loop.

Eventually we plan to use the phase detector in a way similar to the way we use the level modulator, for a 360° phase detector. The outputs are the same as the inputs of the CPM, in "quadrature". This device detects any phase shifts due to nonlinear components, mixers, amplifiers, etc. Data supplied by the phase detector are then passed through a microprocessor and directly fed back to the CPM to correct the phase shift.

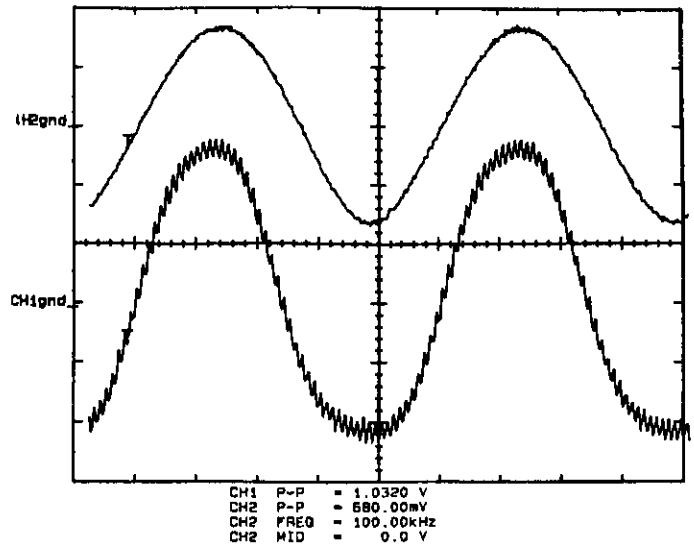

Figure 5 Phase Detectors Output

Conclusion

By using these analog circuits we believe our tight control parameters of 0.3° phase and 1×10^{-4} amplitude control can be met. Nonlinearity due to temperature and power levels no longer poses a significant problem. The cost of this technology is also more in line with what we planned in the budget.

Acknowledgment

The authors wish to express their thanks to Chris Cuevas for his help in writing the software and setting up the computer controls that drove and decoded the components.

References

1. J. Fugitt and T. Moore, "The CEBAF Superconducting Cavity RF Drive System", Proceedings of the 1987 Particle Accelerator Conference.
2. D. H. Sheignold, Editor, "Nonlinear Circuits Handbook", Analog Devices, January 1976.
3. "RF Components and Subsystems", Olektron Corporation, 1984.
4. "Linear Products Data Book", Analog Devices, 1988.