DESIGN, ANALYSIS AND TESTING OF A HIGH THERMAL CONDUCTIVITY WAVEGUIDE WINDOW FOR USE IN A FREE ELECTRON LASER *

T. Schultheiss, V. Christina, M. Cole, J. Rathke, Q. Shu**,
Northrop Grumman Corp, Bethpage, NY.

T. Elliott, V. Nguyen, L. Phillips, J. Preble, Jefferson Lab, Newport News, Va.

Abstract

Design, Analysis, and testing of a waveguide window with a goal of propagating greater than 100 kW average power operating at 1500 Mhz has been performed. This is made possible by the favorable material properties of Beryllia (BeO). Brazing the window to a soft copper frame and then brazing the frame to a KOVAR flange provides the vacuum seal. RF analysis combined with thermal/structural analysis shows the benefits of the material. The KOVAR flange with a CTE, coefficient of thermal expansion, that matches that of BeO enables a strong braze joint. RF testing to 35 kW has been successful, and higher powers will be tested in the near future. The basics of this design can be expanded to applications with lower frequencies and higher average power.

1 INTRODUCTION

The Free Electron Laser Facility being developed at Jefferson Lab requires much higher RF power throughput than is needed for their main facility. Much of the accelerator technology for the free electron laser is taken from the main facility which uses a two window design. The window design for the FEL consists of a room temperature warm window and a 2K cold window like the main facility. The warm window design from the main facility does not work at the power levels required for the FEL, therefore, Jefferson Lab initiated the development of a warm window using the cold window design as a baseline. In a corroborating effort, Northrop Grumman began developing a backup warm window design to enable greater than 100 kW average power operating at 1500 Mhz. The design was developed as a direct replacement in the FEL warm window location.

2 MECHANICAL DESIGN

The design evolved with the primary consideration to develop a backup warm window that would fit in the TJNAF envelope. Preliminary comparisons between alumina and beryllia windows showed that for standard grade material the high thermal conductivity of beryllia, shown in Table 1, resulted in low thermal gradients, and therefore low thermal stress within the window.

Table 1: Comparison of Thermal Conductivity's at 25C

Material	W/mK
Copper	380
Beryllia	300
SiC	270
AlN	240
Al	230
Mo	140
Alumina	20

To match the thermal expansion of beryllia, KOVAR was chosen as the flange material, minimizing thermal stresses in the beryllia during the braze cycle. A thin OFHC copper frame, .010 inches thick, between the beryllia window and the relatively stiff flange was added for strain relief. High thermal conductivity of the copper is also a benefit. Figure 1, shows a solid model of the window, the copper frame and the KOVAR flange. The KOVAR flange included a copper plating for high electrical conductivity.

The preferred BeO window geometry was an 'off the shelf' flat piece of Thermalox 995, .100 inches thick, from Brush Wellman. The thickness was chosen to keep the stress due to pressure low while using a stock size of standard grade material, ensuring repeatable material properties. Presently there is no multipacting coating on the window.

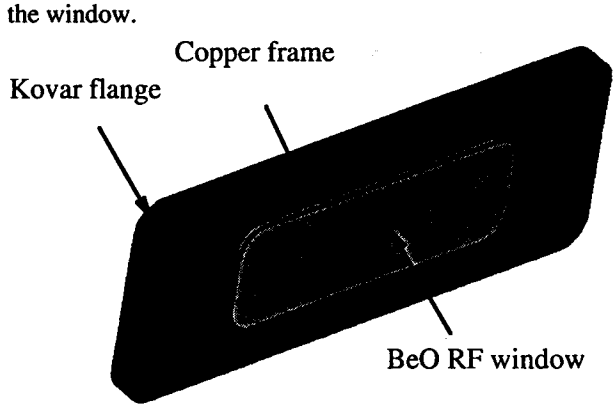

Figure 1: BeO RF Window, Flange and Frame

* Work supported by CRADA between NGC and Thomas Jefferson National Accelerator Facility SURA 95-S003 CRADA
** Q. Shu now at AMAC, LLC, Newport News Va.

3 BRAZE PROCESS

A two step braze process was used, first the copper frame was brazed to the BeO window then the copper frame was brazed to the KOVAR flange. The following steps were used to attach the frame to the BeO window:

- Molymanganese metallization 1/4" wide around the surface to be brazed. Silk screen technique was used then fired at 1450 C.
- Nickel plate metallized area then sinter at 1000 C
- Nicoro ribbon is used with a (apprx. 15 lb.) weight on fixture brazed at 1050 C
- A nioro wire (20 mil O.D.) braze around the outer edge between the BeO and copper and fired at 970 C
- Helium leak check 1x 10-8 std cc/sec
- Light blasting was done with aluminum oxide particles

The second step of the process was to braze the copper frame to the KOVAR flange.

- Incusil-10 wire in a vacuum braze oven and fired to 750 C
- Mask the copper plated KOVAR and apply a light blasting with aluminum oxide particles to clean beryllia surface

4 RF DESIGN

RF analysis was used to determine the S parameters for the structure and to optimize the structure within the requirements set by the envelope and mechanical design. Table 2 compares the electrical properties of BeO with other standard grade candidate materials.

Table 2: Comparison of Electrical Properties

Material	Dielectric Const (1MHz)	Loss Tangent
Beryllia (Thermalox 995)	6.7	.0003
AlN	9.0-10.0	
Alumina	9.0	.0003

To optimize the structure with a .100 inch thick BeO window, metal "wings" forming an iris were added to the flange. These wings were added to both sides of the window as shown in figure 2. Results for wings on just one side were not acceptable. The following MAFIA RF analysis results were obtained for a wing width of .750", and a wing thickness of .100".

Table 3: S Parameter Results

S11 amplitude	S11 phase	S21 amplitude	S21 phase
.0066	87.30	.99956	-2.740

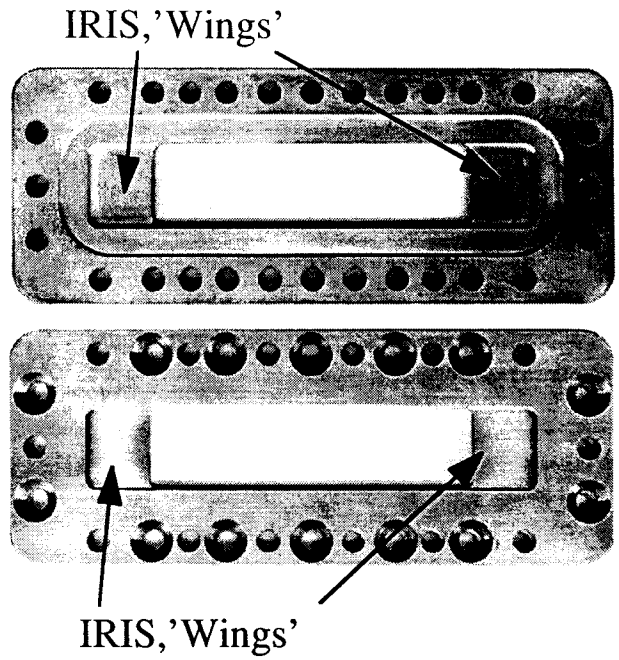

Figure 2: RF window and Iris('wings') and flange

After this configuration was selected, the power deposited into the ceramic and the fields in the waveguide were calculated. Contours of the heat deposited in the window are shown in figure 3 after scaling to a loss tangent of .0003 and 100 kW of through power.

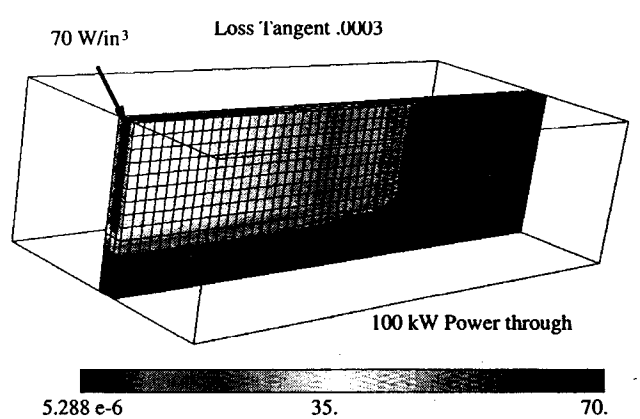

Figure 3: Heat loss contours determined by MAFIA

5 THERMAL ANALYSIS

The power loss distribution calculated in MAFIA was then mapped into an ANSYS finite element model. This model was used to determine thermal gradients and stresses in the window. Figure 4 shows the resulting temperature contours in the window, the frame, and the flange. On the edge of the flange a boundary temperature of 20C was set. The results show very small gradients in the window and a temperature rise of 29C between the window and the flange edge. These small thermal gradients result in small stress in the window.

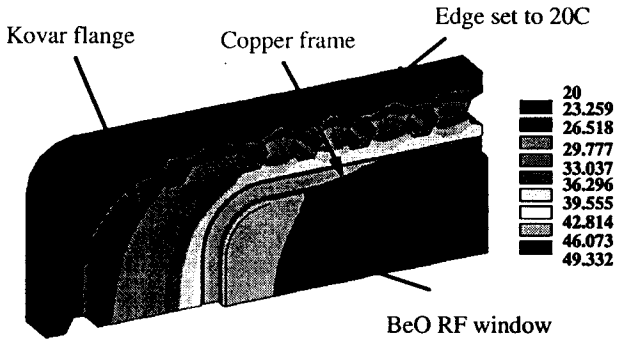

Figure 4: Temperature contours from ANSYS

6 RF TESTS

Thomas Jefferson National Accelerator Facility (TJNAF) provided the facility and manpower to test the window. Figure 5 shows the layout of the high power test. The space between the PN001 JLAB window and the BeO test window was evacuated by a 160 l/s Vac-Ion pump while the waveguide between the BeO window and the load was at atmospheric pressure. The window flanges were water cooled. The baseline pressure prior to testing was 1.4x10-9 torr. Temperatures at different locations of the waveguide and window flanges were monitored by thermocouples. Temperature of the BeO ceramic was measured by an infrared thermometer through a viewing port on the waveguide elbow. The waveguide between the two windows was equipped with a pick-up probe to monitor the electron current. A vacuum interlock and an arc detector interlock were used to prevent a catastrophic destruction of the ceramic. During the test, the incident and reflected powers, the vacuum pressure, the electron current, the temperature of the BeO ceramic and the temperatures of the window flanges were continuously monitored and recorded.

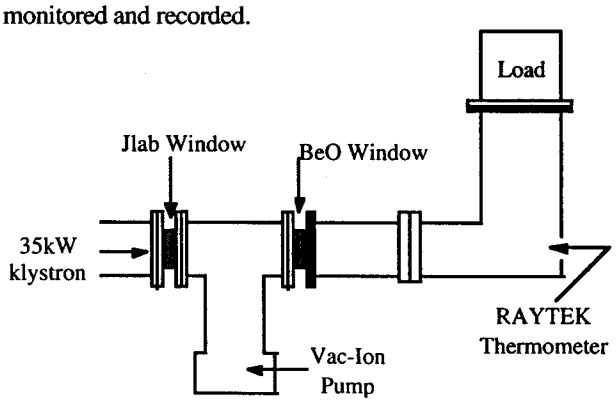

Figure 5: RF window test set up

Prior to applying high CW power, the windows were first submitted to high pulsed power (pulse length .01 ms - .1 ms, with a repetition rate of 100 Hz). Table 3 shows the temperature rise of the BeO ceramic as the power is increased. The temperature of the ceramic at zero power was 28C. The vacuum pressure increased to 9.4x10-8 torr at 35 kW and no electron current was detected.

Table 4: Temperature Rise In BeO Ceramic

Power (kW)	BeO Temp C	T(BeO)-27.7 ΔT C
0	27.7	0
5.04	35	7.3
10.1	40.8	13.1
15.1	45.7	18
20.2	51.2	23.5
25.2	58.2	30.5
35	70.9	43.2

The temperature rise between the coolant and the BeO window was much higher than expected from analysis. This could be from high losses in the braze material and/or poor thermal contact between the coolant line and the flange. This will be looked at more closely as additional tests are run.

7 CONCLUSIONS

Analysis shows that for the expected power lost in the window the goal of 100 kW of through power at 1500 Mhz is achievable. The high thermal conductivity of BeO results in low thermal gradients within the ceramic. Further tests are planned for 50 kW of through power. Modifications to the design which would include coolant nearer the ceramic would ensure lower ceramic temperatures. BeO as an RF window material shows promise based on the analysis and tests to date.

8 REFERENCES

[1] E. Chojnacki, et al., "Design Of A High Average-Power Waveguide Window"; Proceedings of the Particle Accelerator Conference, 1997, Vancouver, Canada.

[2] M. Neubauer, et al., "High-Power RF Window and Coupler Development for the PEP-II B Factory"; Presented at 16th IEEE PAC 95 Conference and International Conference on High Energy Accelerators, Dallas, Texas, May 1-5, 1995.

[3] D. Proch, et al., "Measurement of Multipacting Currents of Metal Surfaces in RF Fields"; Proceedings at the 16th IEEE PAC 95 Conference and International Conference on High Energy Accelerators, Dallas, Texas, May 1-5, 1995; pp 1776-1778.

[4] Conversations with Brush Wellman.