REV.	DATE	DESCRIPTION	BY	APP'D
1	6-89	CORRECTED INSIDE DIA	WAALER	
2	3-91	SPECIFIED CSK DIA ON HOLES	URIBE	

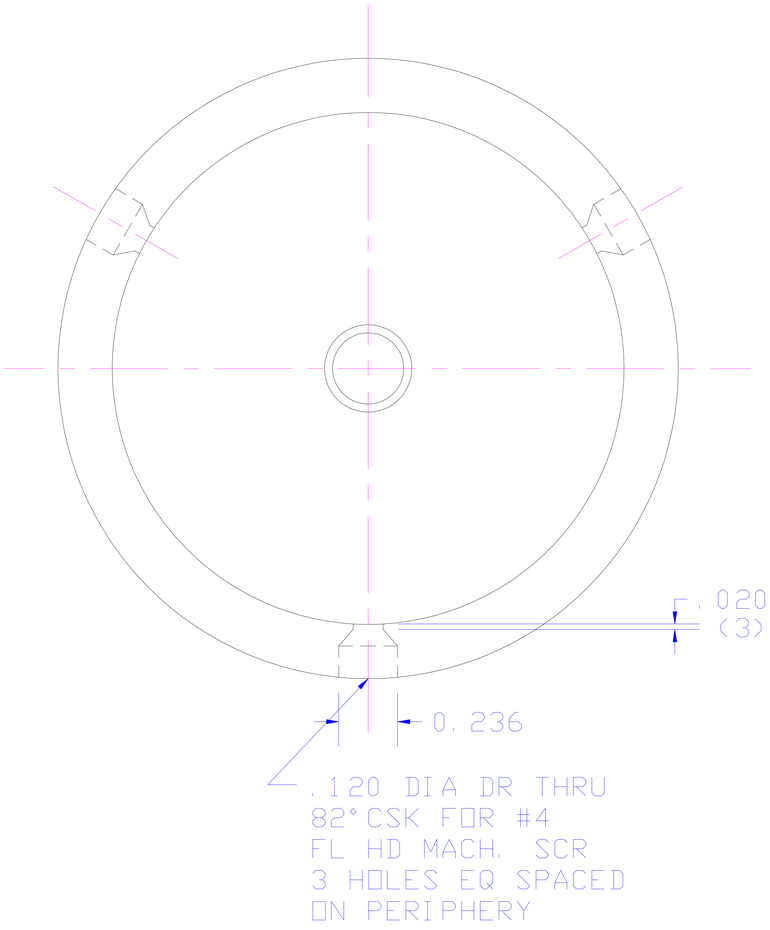

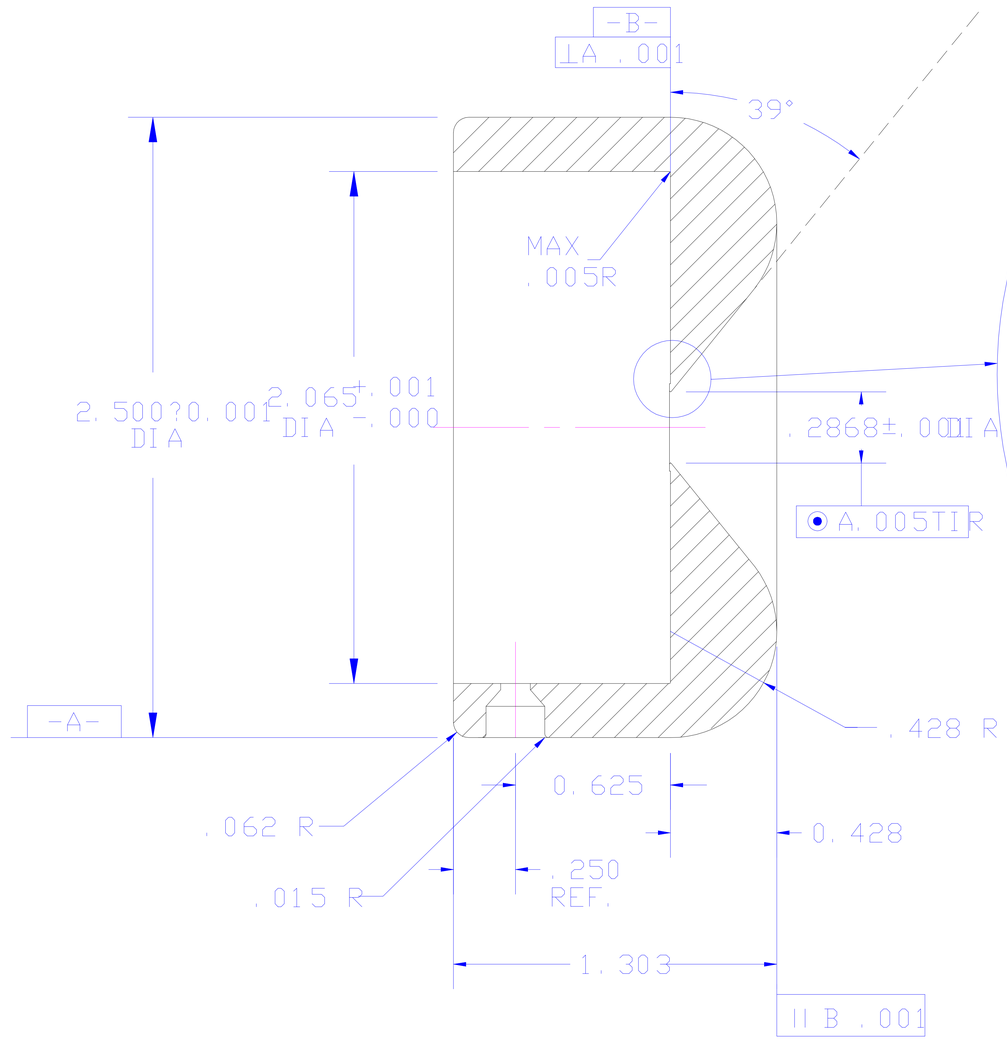

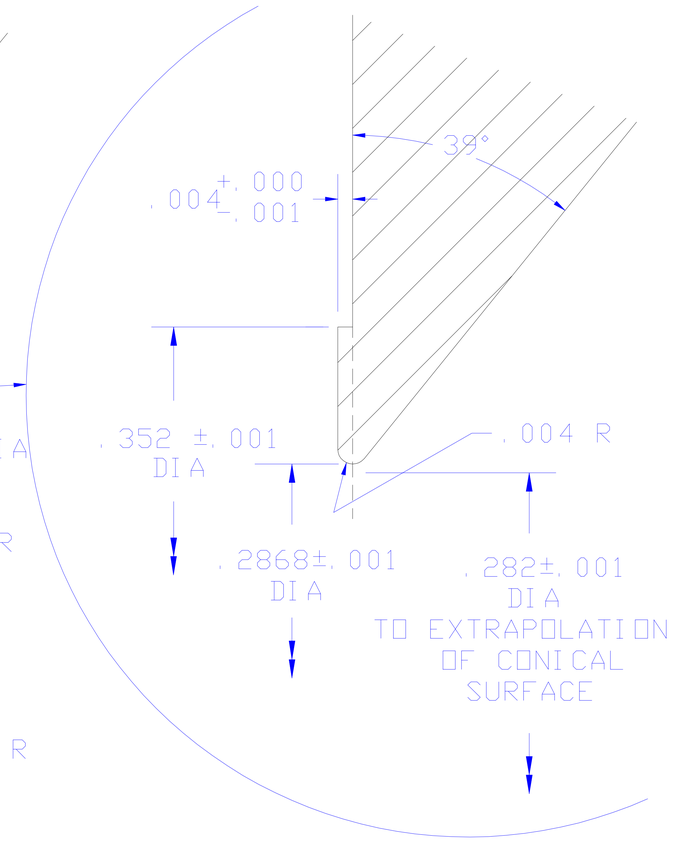

DETAIL 1
(SCALE: 16=1)

NOTES

1. MAT'L: VACUUM-MELT 304-SST
2. ALL RADII AND STRAIGHT SECTIONS MUST BLEND SMOOTHLY 16 FINISH OR BETTER.
3. DO NOT USE EMERY
4. STRESS RELIEVE BEFORE FINAL MACHINING. HEAT TO 1500° -1600° F FOR 15-30 MINUTES. COOL SLOWLY IN DRY HYDROGEN.
5. ALL MACHINING TO BE DONE WITH SULFUR-FREE CUTTING OIL.
6. DIAMOND PASTE POLISH THIS PART.

SLAC: PF795-641-08-R0 MODIFIED

DRAWN BY URIBE	NUCLEAR PHYSICS LABORATORY UNIVERSITY OF ILLINOIS AT URBANA-CHAMPAIGN	PIERCE ELECTRODE FOR CHALCOPYRITE SAMPLES		
CHECKED BY	UNLESS OTHERWISE SPECIFIED DIMENSIONS IN INCHES 2 PLACE DEC. ±.01 BREAK SHARP CORNERS 3 PLACES DEC. ±.003 FRACTIONAL ±1/32° ANGULAR ±0° 30'	PART NO. NO. REQ'D.	SCALE 2=1	FILE 15
APPROVED BY		CHASSIS NO. OR MATERIAL LISTED	DATE 5-8-89	DWG. NO. C-2709-92