REV.	DATE	DESCRIPTION	BY	APP'D

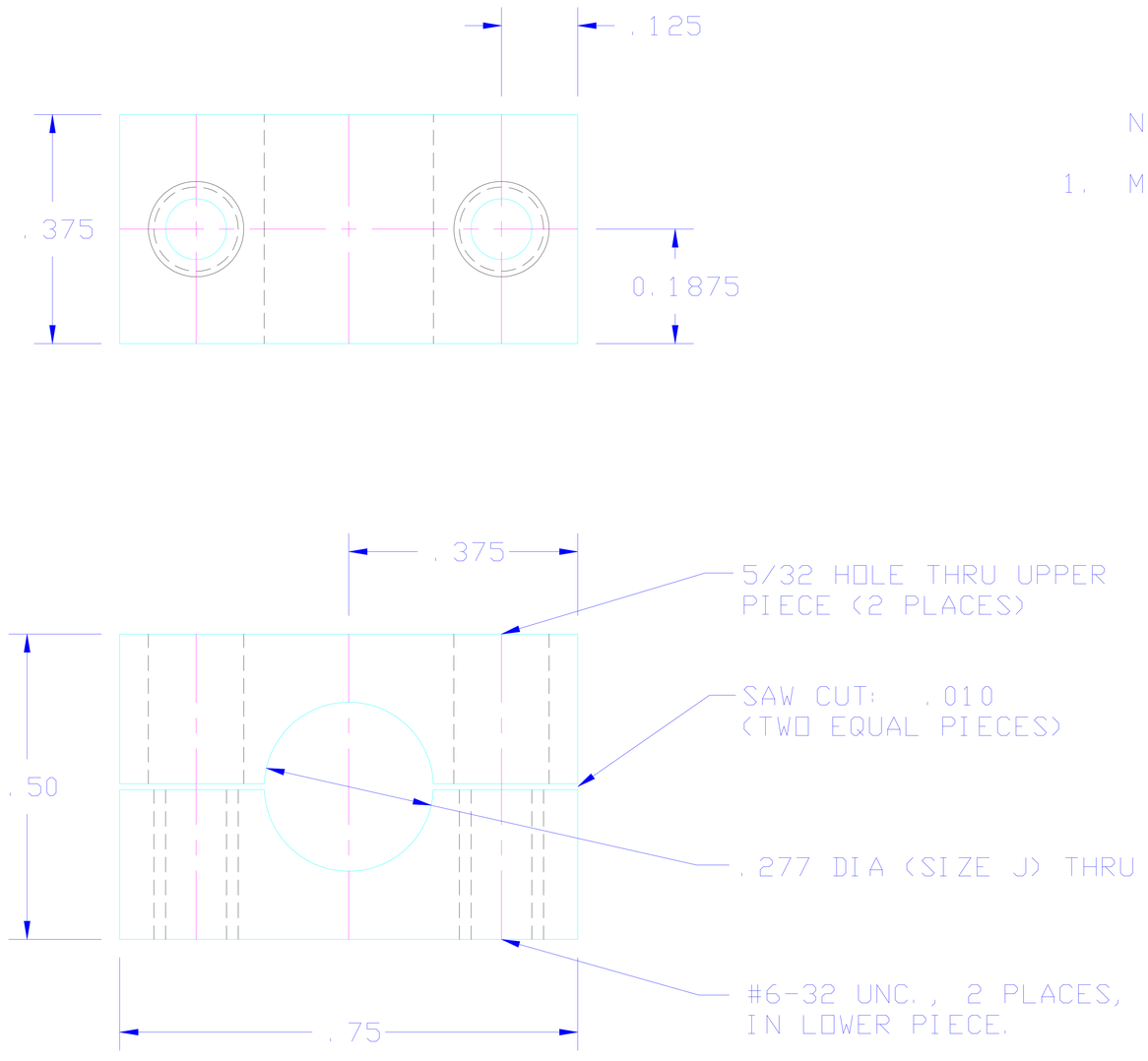

NOTE

1. MATERIAL: COPPER

DRAWN BY URIBE	NUCLEAR PHYSICS LABORATORY UNIVERSITY OF ILLINOIS AT URBANA-CHAMPAIGN	THERMOCOUPLE CLAMP FOR CESIATOR VALVE TUBE		
CHECKED BY	UNLESS OTHERWISE SPECIFIED	PART NO.	SCALE 5=1	FILE 12
	DIMENSIONS IN INCHES 2 PLACE DEC. ±.01	NO. REQ'D.		
APPROVED BY	BREAK SHARP CORNERS 3 PLACES DEC. ±.003 FRACTIONAL ±1/32" ANGULAR ±0°30'	CHASSIS NO. OR MATERIAL LISTED	DATE 12-28-88	DWG. NO. C-2709-83