REV.	DATE	DESCRIPTION	BY	APP'D

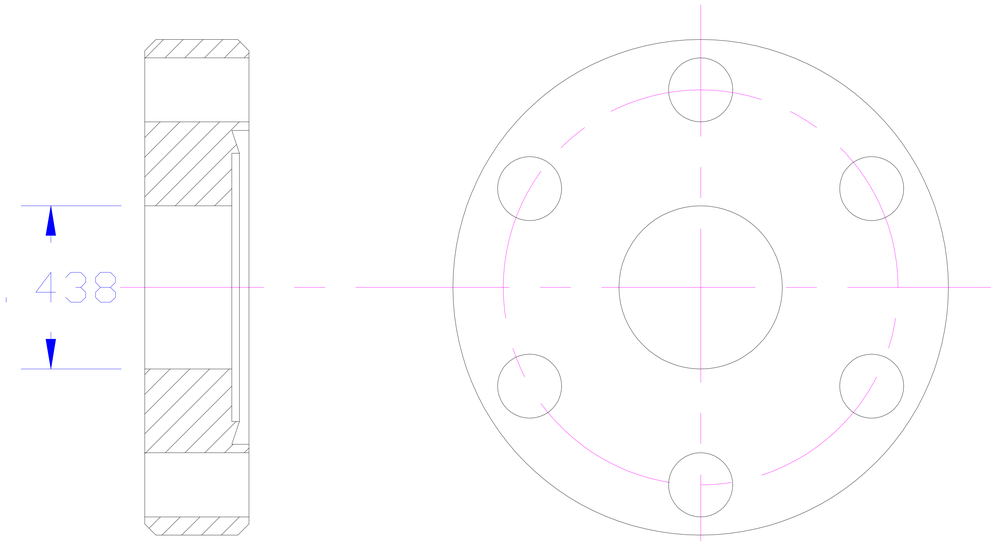

1 1.33" FLANGE

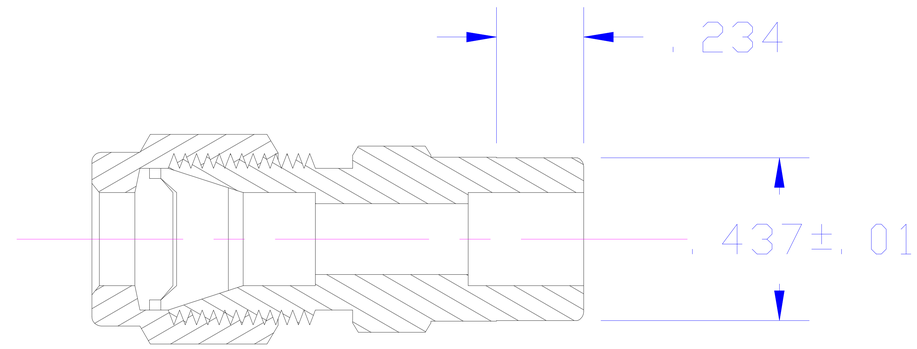

2 1/4" SWAGELOK

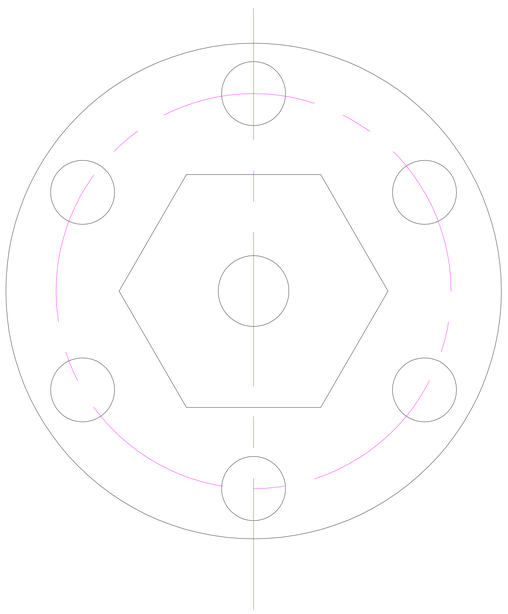

NOTES

1. ALL MACHINING TO BE DONE WITH SULFUR-FREE CUTTING OIL.
2. PROTECT KNIFE EDGE WHILE WELDING.
3. WELD SO THAT HEX NUT ON SWAGELOK LINES UP WITH BOLT HOLES ON FLANGE.

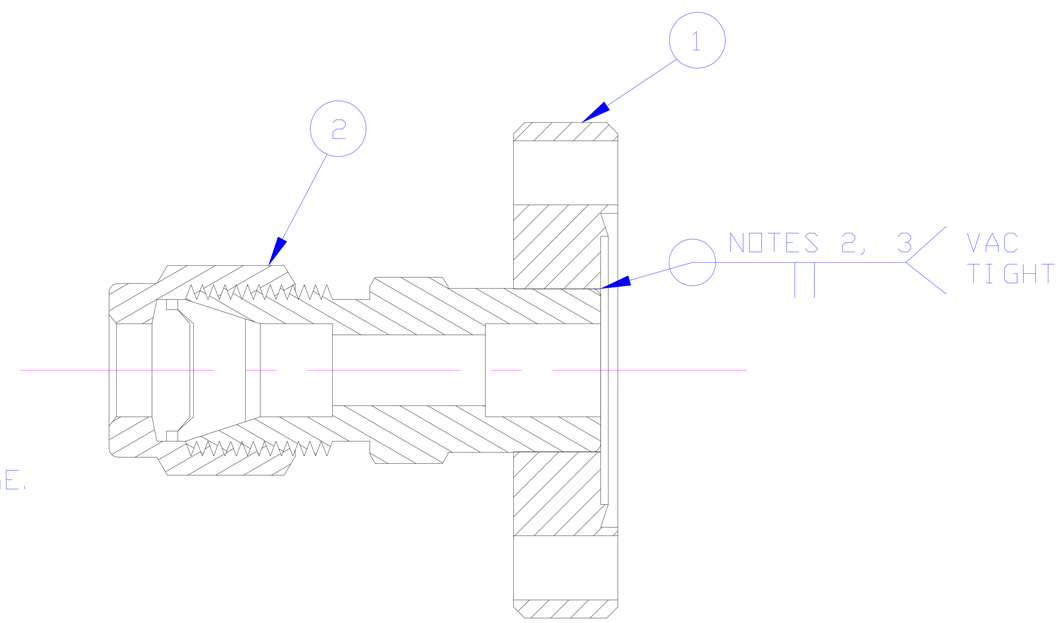

ITEM	PART NO.	DESCRIPTION	QTY.
2	SS-400-6-4W	1/4" SWAGELOK WELD UNION (MODIFIED AS SHOWN)	1
1	F133000	MDC MINI FLANGE (MODIFIED AS SHOWN)	1

DRAWN BY URIBE	NUCLEAR PHYSICS LABORATORY UNIVERSITY OF ILLINOIS AT URBANA-CHAMPAIGN	SWAGELOK-MINI CONFLAT FITTING FOR BALZERS LEAK VALVE		
CHECKED BY	UNLESS OTHERWISE SPECIFIED	PART NO. NO. REQ'D.	SCALE 3=1	FILE 12
APPROVED BY	DIMENSIONS IN INCHES 2 PLACE DEC. ±.01 BREAK SHARP CORNERS 3 PLACES DEC. ±.003 FRACTIONAL±1/32" ANGULAR±0°30'	CHASSIS NO. OR MATERIAL LISTED	DATE 11-25-88	DWG. NO. C-2709-81