REV.	DATE	DESCRIPTION	BY	APP'D

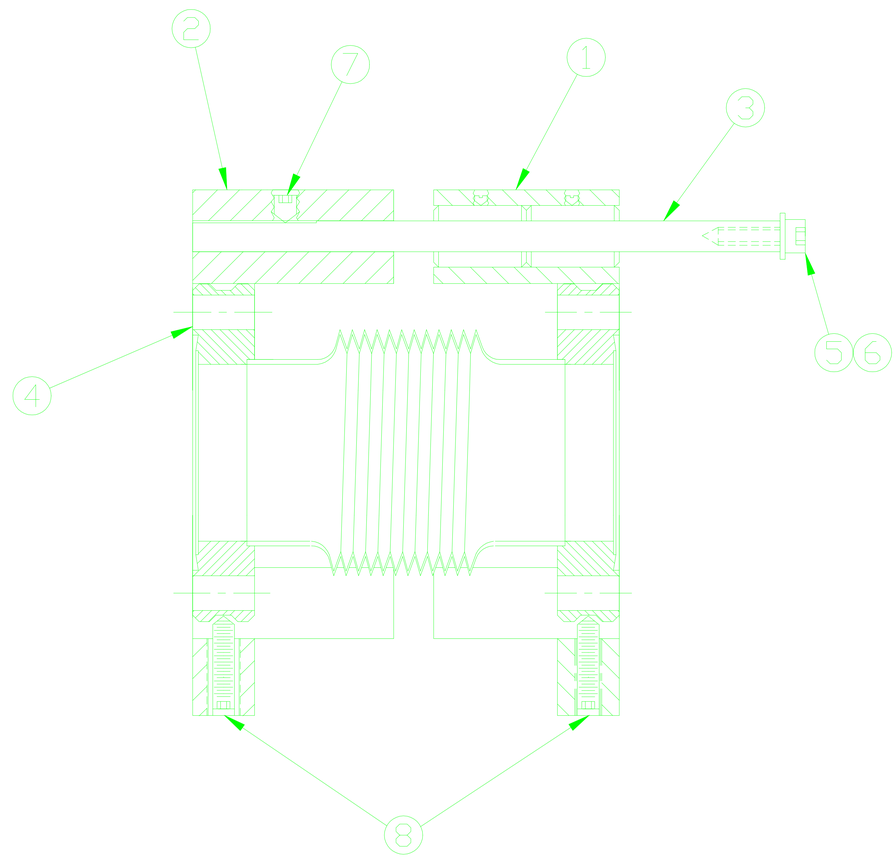

NOTES:

1. LUBRICATE WITH BAKED-ON COATION OF MoS_2

2. SILVER PLATE CAPSCREWS AND WASHERS .0002 THK

3. SUBSTITUTE C-2709-67 GUIDE RODS DURING BAKEOUT

	ITEM	PART NO.	DESCRIPTIONS	QTY
NOTE 2	8		1/4-20 UNC HEX SOC SET SCREW-3/4" LG	6
	7		#10-32 UNC HEX SOC SET SCREW-1/4"LG	3
NOTE 1	6		#8-32 UNC SOC HD CPSCR-1/2" LG	3
	5		WASHER-FLAT STEEL #8	3
	4	C-2709-69A	STALK BELLOWS	1
NOTE 3	3	C-2709-68	STALK BELLOWS GUIDE ROD	3
	2	C-2709-66	STALK BELLOWS GUIDE ROD MOUNT	1
	1	C-2709-6	BUSHING MOUNT	1

DRAWN BY SPESE	NUCLEAR PHYSICS LABORATORY UNIVERSITY OF ILLINOIS AT URBANA-CHAMPAIGN	STALK BELLOWS AND GUIDE ROD ASSEMBLY		
CHECKED BY	UNLESS OTHERWISE SPECIFIED DIMENSIONS IN INCHES 2 PLACE DEC. ±.01 BREAK SHARP CORNERS 3 PLACES DEC. ±.003 FRACTIONAL±1/32" ANGULAR±0°30'	PART NO.	SCALE 1=1	FILE 15
		NO. REQ'D.		
APPROVED BY		CHASSIS NO. OR MATERIAL	DATE 12-10-91	DWG. NO. C-2709-80A