REV.	DATE	DESCRIPTION	BY	APP'D
1	4-91	ALIGNED EAR WITH LEAK GROOVE	URIBE	

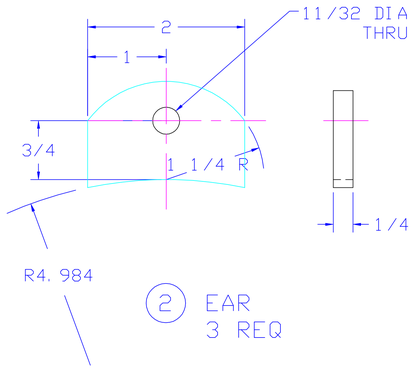

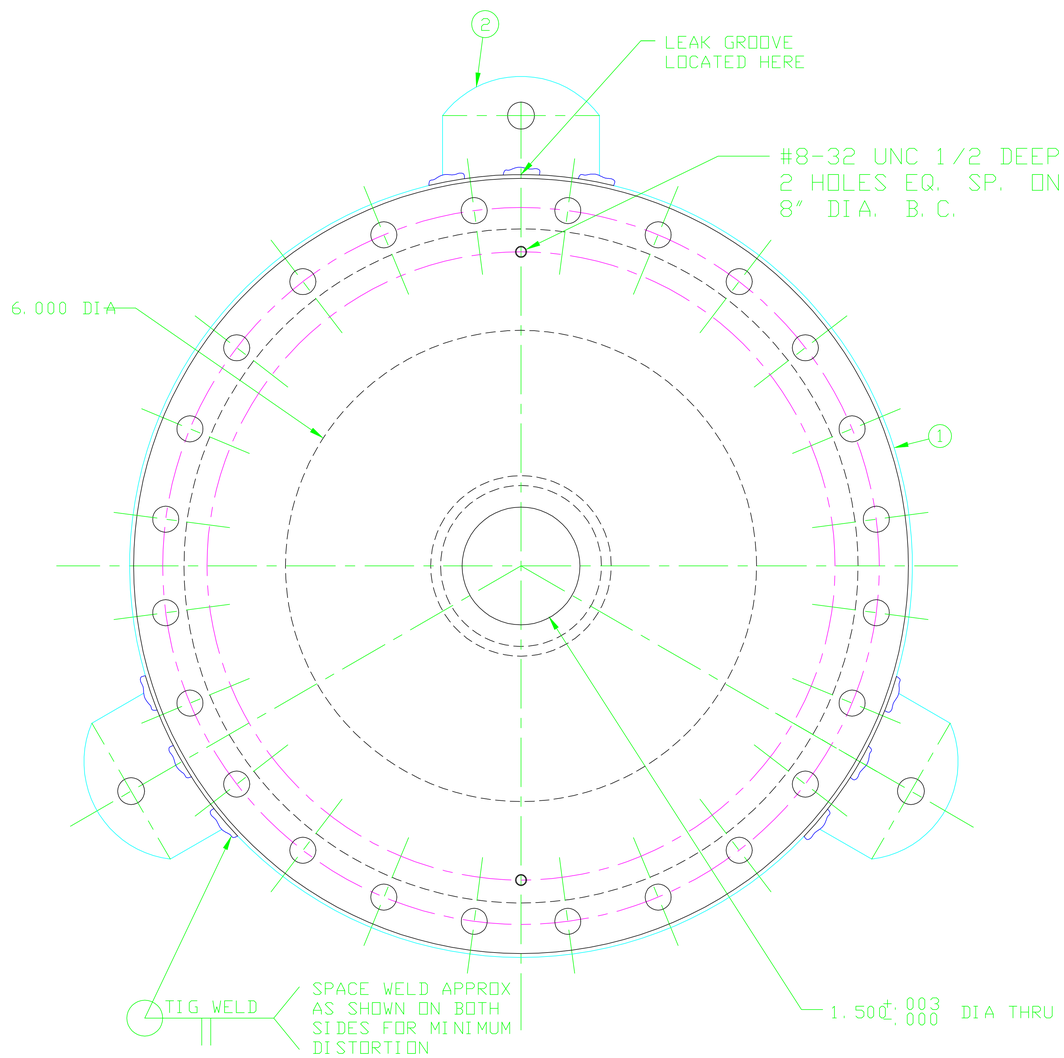

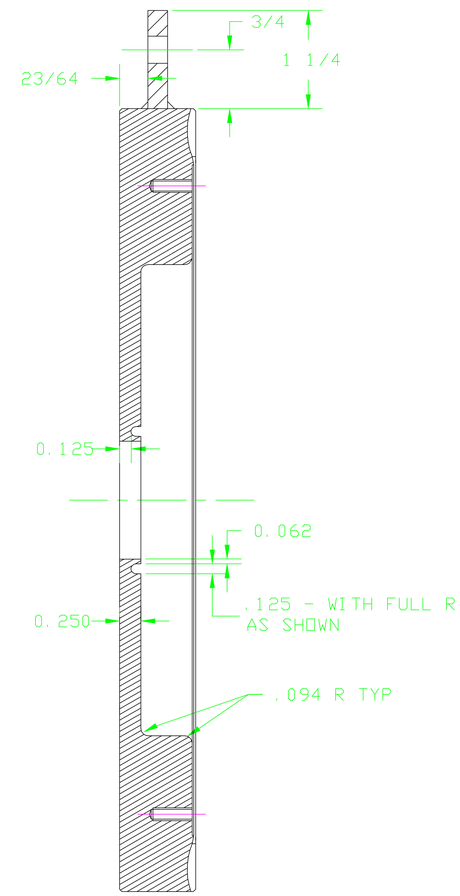

NOTE: ALL MACHINING TO BE DONE WITH SULFUR-FREE CUTTING OIL.

ITEM	PART NO.	DESCRIPTION	QTY.
2		1/4" THK 304 SST	
1	F1000000	MDC FLANGE MODIFIED AS SHOWN	1

DRAWN BY URIBE	NUCLEAR PHYSICS LABORATORY UNIVERSITY OF ILLINOIS AT URBANA-CHAMPAIGN	CHAMBER MOUNTING FLANGE (3-POINT VERSION)		
CHECKED BY	UNLESS OTHERWISE SPECIFIED DIMENSIONS IN INCHES 2 PLACE DEC. ±.01 BREAK SHARP CORNERS 3 PLACES DEC. ±.003 FRACTIONAL±1/32" ANGULAR±0°30'	PART NO.	SCALE 1=1	FILE 15
APPROVED BY		NO. REQ'D.		
		CHASSIS NO. OR MATERIAL LISTED	DATE 5-17-90	DWG. NO. D-2709-76A