REV.	DATE	DESCRIPTION	BY	APP'D
1	3-91	REVISED C'BORE ON TAPPED HOLE	URIBE	

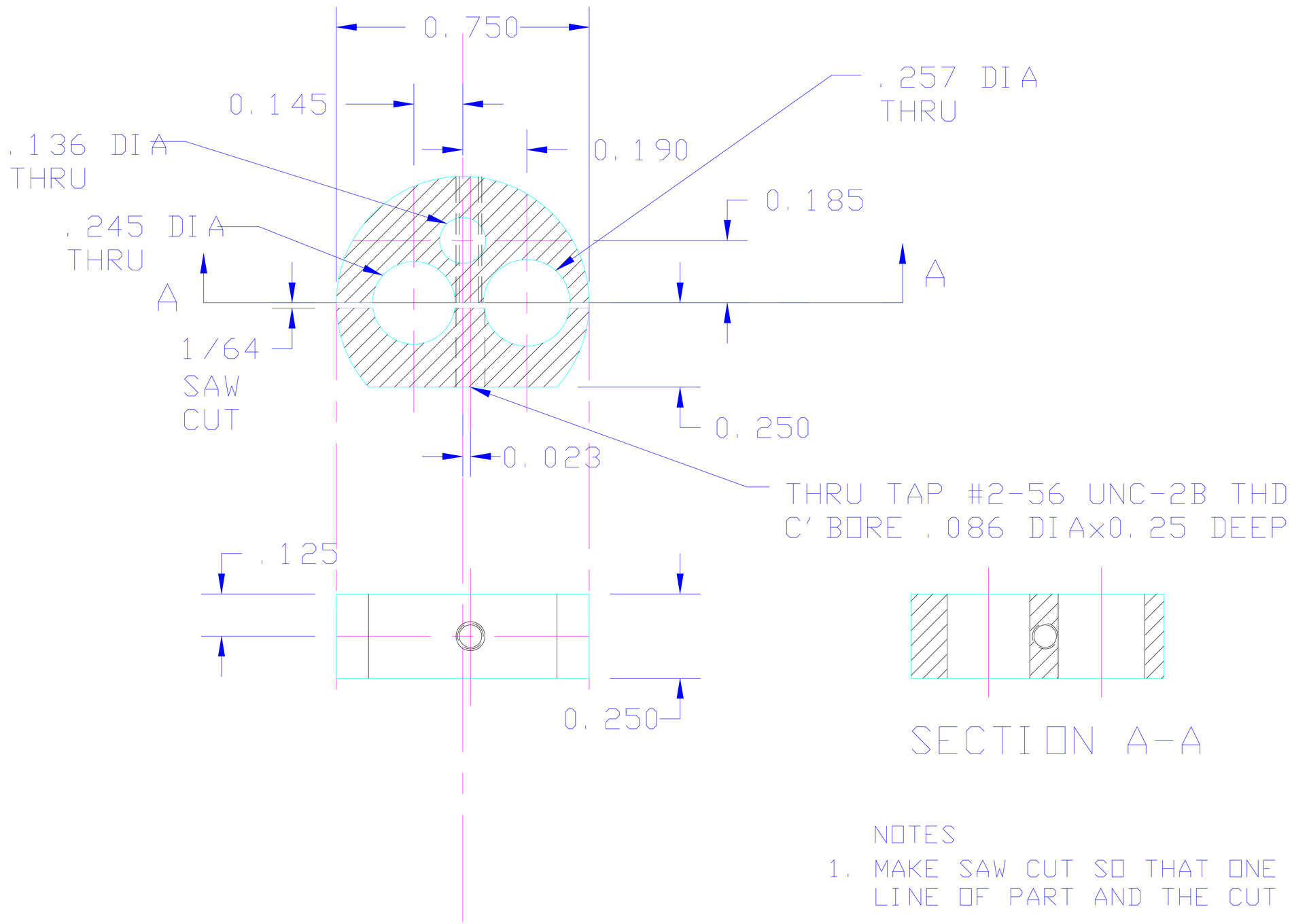

SECTION A-A

NOTES

1. MAKE SAW CUT SO THAT ONE EDGE IS ON CENTER LINE OF PART AND THE CUT IS TOWARD THE FLAT.
2. MAT'L: 304 SS

DRAWN BY URIBE	NUCLEAR PHYSICS LABORATORY UNIVERSITY OF ILLINOIS AT URBANA-CHAMPAIGN	STALK HEATER CLAMP		
CHECKED BY	UNLESS OTHERWISE SPECIFIED DIMENSIONS IN INCHES 2 PLACE DEC. ±.01 BREAK SHARP CORNERS 3 PLACES DEC. ±.003 FRACTIONAL±1/32" ANGULAR±0°30'	PART NO. NO. REQ'D. 1	SCALE 4=1	FILE 15
APPROVED BY		CHASSIS NO. OR MATERIAL LISTED	DATE 7-14-88	DWG. NO. C-2709-70