REV.	DATE	DESCRIPTION	BY	APP'D
1	1-89	THICKNESS: .75 WAS .5	URIBE	

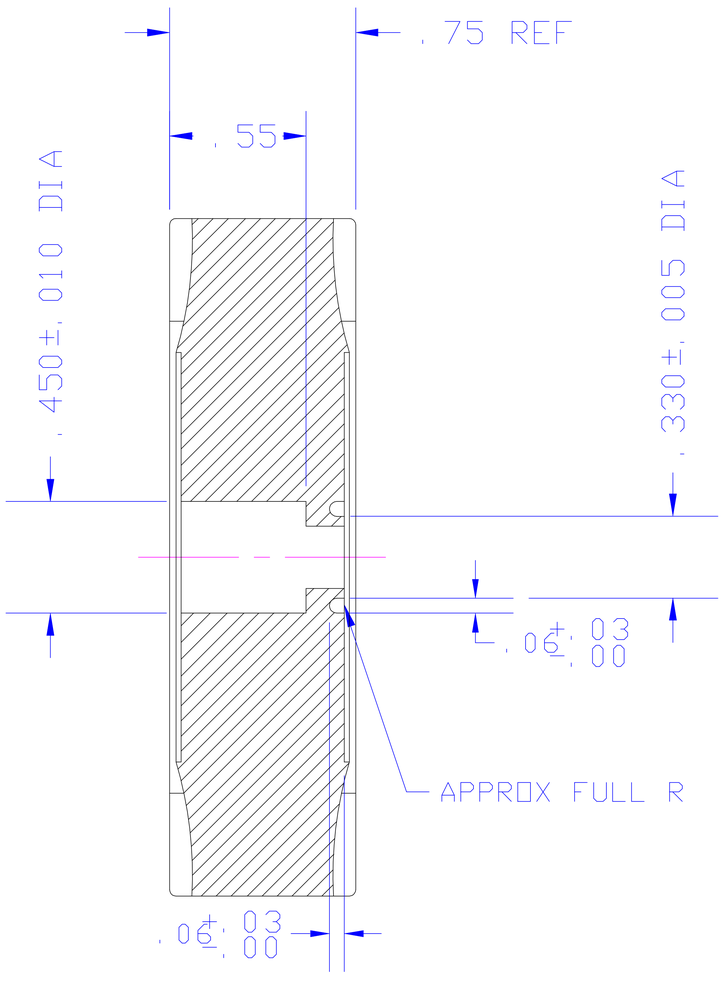

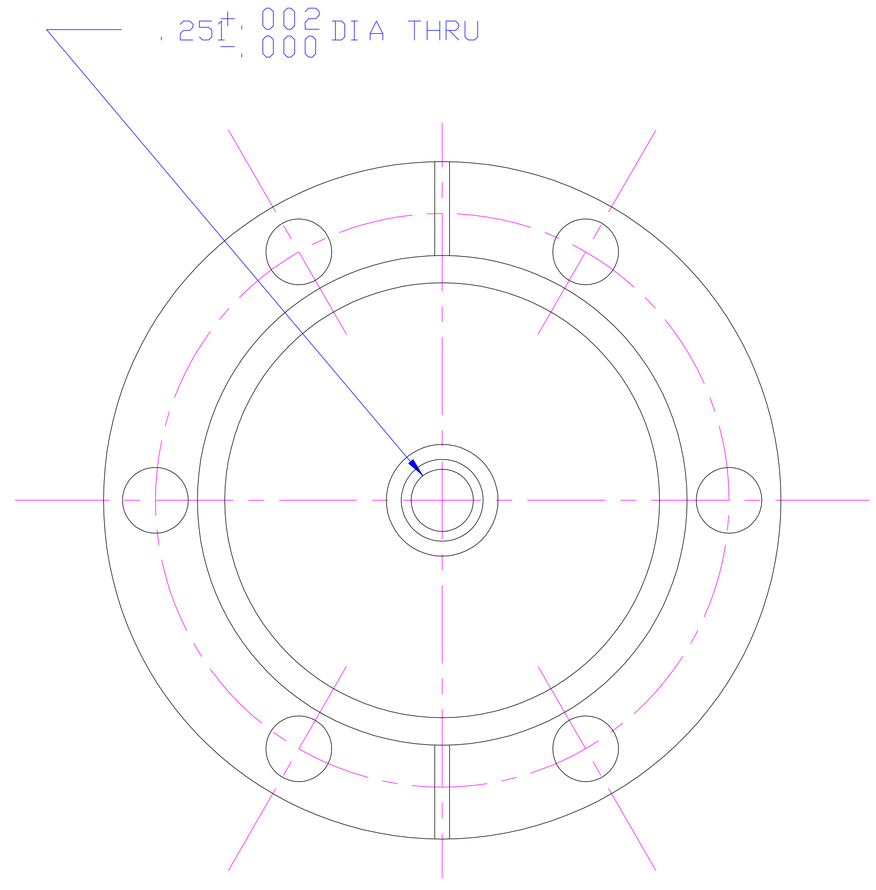

NOTES

1. MATERIAL: MAKE FROM MDC FLANGE #FD-275000 (2 3/4 OD BLANK NON-ROTATABLE) OR EQUIVALENT
2. DO NOT SCREW UP THE KNIFE EDGE IN ANY WAY
3. OBSERVE ORIENTATION OF BOLT HOLES AND LEAK CHECK GROOVES.
4. ALL MACHINING TO BE DONE WITH SULFUR-FREE CUTTING OIL.

DRAWN BY URIBE	NUCLEAR PHYSICS LABORATORY UNIVERSITY OF ILLINOIS AT URBANA-CHAMPAIGN	GAS TUBE FLANGE		
CHECKED BY	UNLESS OTHERWISE SPECIFIED	PART NO.	SCALE 2=1	FILE 12
	DIMENSIONS IN INCHES 2 PLACE DEC. ±.01	NO. REQ'D.		
APPROVED BY	BREAK SHARP CORNERS 3 PLACES DEC. ±.003	CHASSIS NO. OR MATERIAL LISTED	DATE 7-11-88	DWG. NO. C-2709-63
	FRACTIONAL±1/32" ANGULAR±0°30'			