REV.	DATE	DESCRIPTION	BY	APP'D
1	8-91	ADDED NECESSARY DIMENSIONS	URIBE	

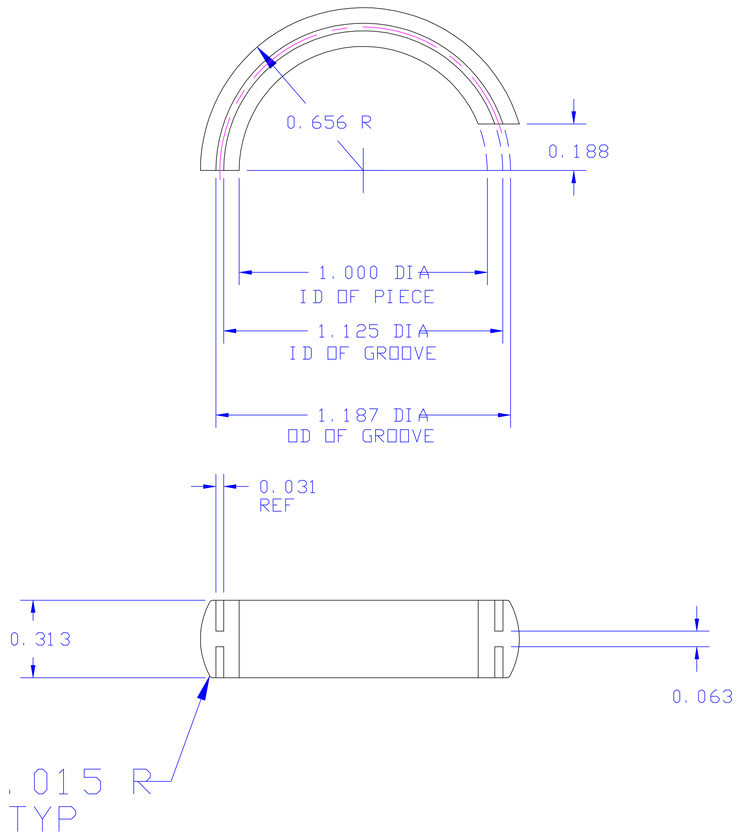

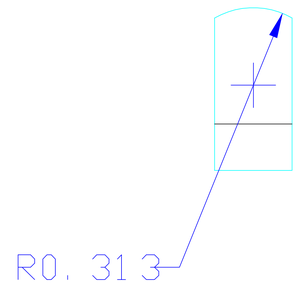

NOTES

1. MATERIAL: ALUMINUM 6061

2. GOLD ANODIZE AFTER FABRICATION

DRAWN BY URIBE	NUCLEAR PHYSICS LABORATORY UNIVERSITY OF ILLINOIS AT URBANA-CHAMPAIGN	RING COUPLER		
CHECKED BY	UNLESS OTHERWISE SPECIFIED	PART NO.	SCALE 2=1	FILE 15
	DIMENSIONS IN INCHES 2 PLACE DEC. ±.01	NO. REQ'D.		
APPROVED BY	BREAK SHARP CORNERS 3 PLACES DEC. ±.003 FRACTIONAL±1/32" ANGULAR±0°30'	CHASSIS NO. OR MATERIAL LISTED	DATE 7-18-88	DWG. NO. C-2709-51