REV.	DATE	DESCRIPTION	BY	APP'D

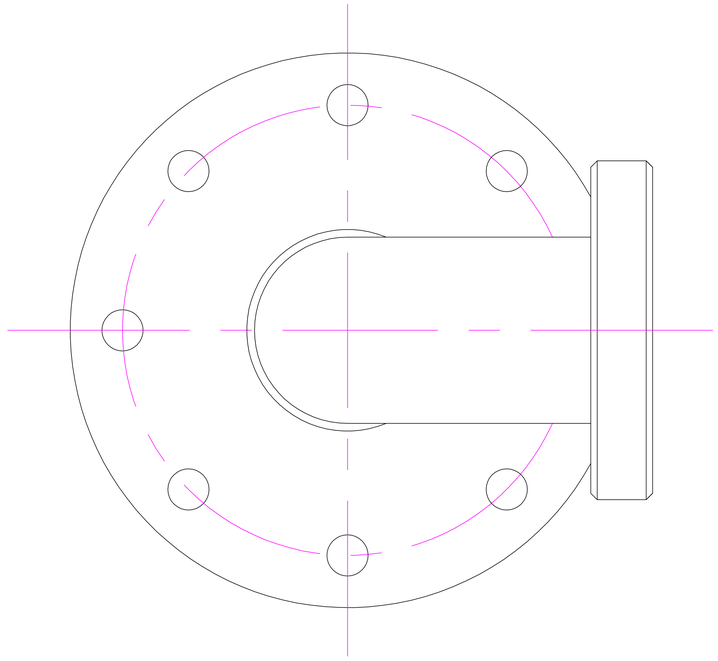

NOTES

MDC 2 3/4" ELBOW MODIFIED FOR A 4 1/2" FLANGE
PART NO.: SPECIAL 403002
REF NO.: 150-2L

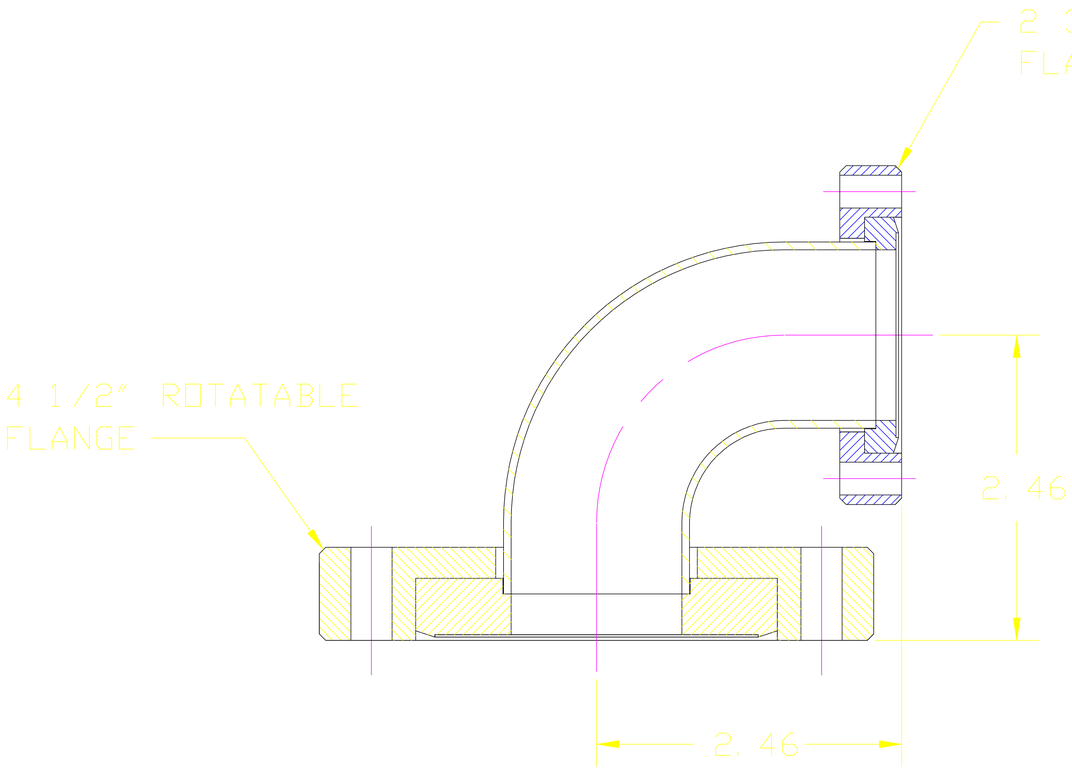

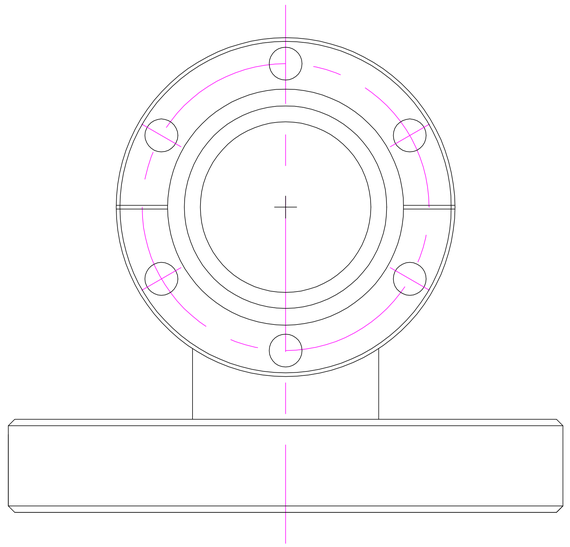

DRAWN BY URIBE	NUCLEAR PHYSICS LABORATORY UNIVERSITY OF ILLINOIS AT URBANA-CHAMPAIGN	2 3/4" - 4 1/2" ADAPTER ELBOW		
CHECKED BY	UNLESS OTHERWISE SPECIFIED DIMENSIONS IN INCHES 2 PLACE DEC. ±.01 BREAK SHARP CORNERS 3 PLACE DEC. ±.003 FRACTIONAL ±1/32" ANGULAR ±0°30'	PART NO.	SCALE 1=1	FILE 15
		NO. REQ'D.		
APPROVED BY		CHASSIS NO. OR MATERIAL	DATE 10-18-91	DWG. NO. C-2709-125