REV.	DATE	DESCRIPTION	BY	APP'D

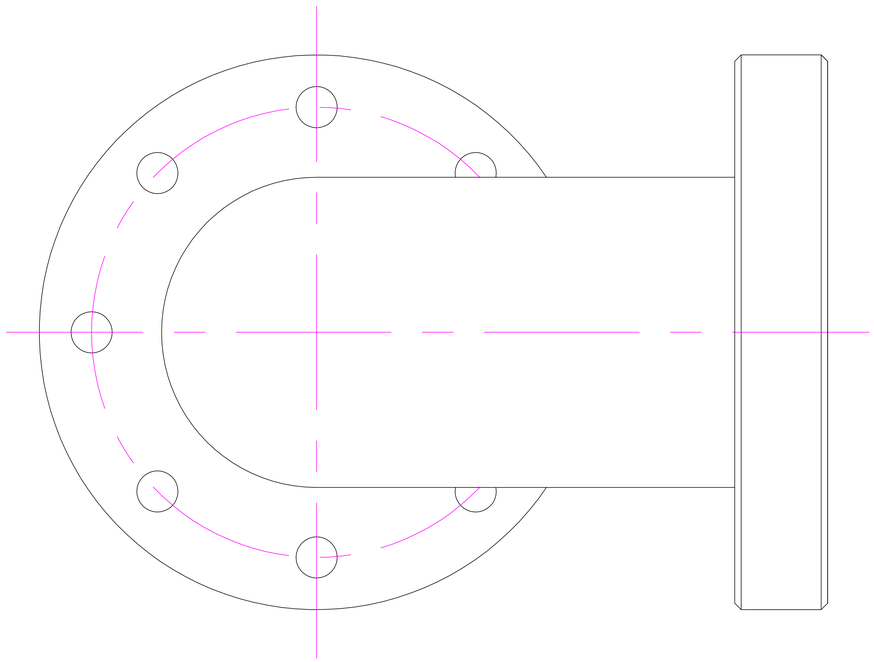

NOTES

1. MDC 4 1/2" ELBOW
   PART NO. 403004
   REF. NO. 250-SL

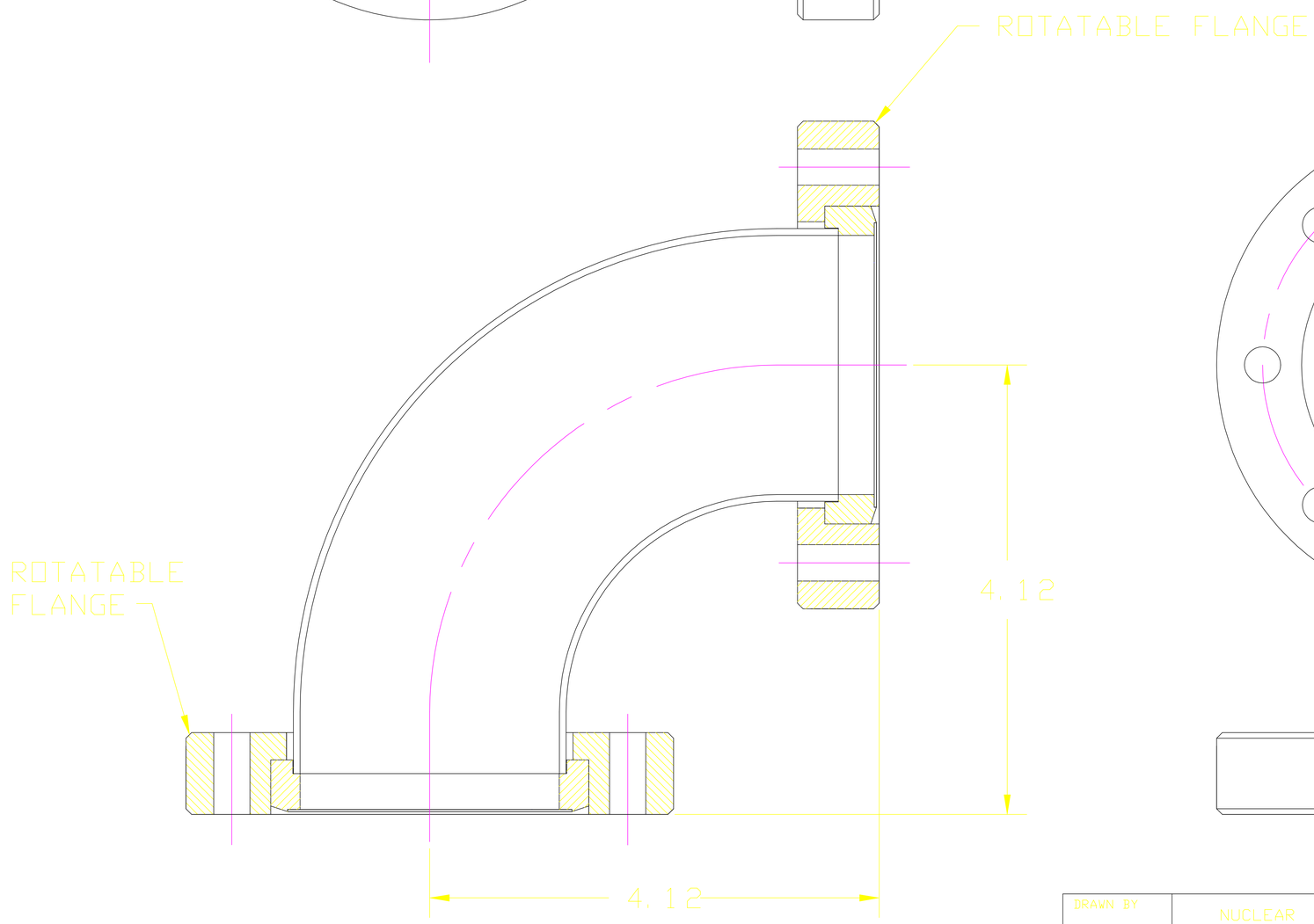

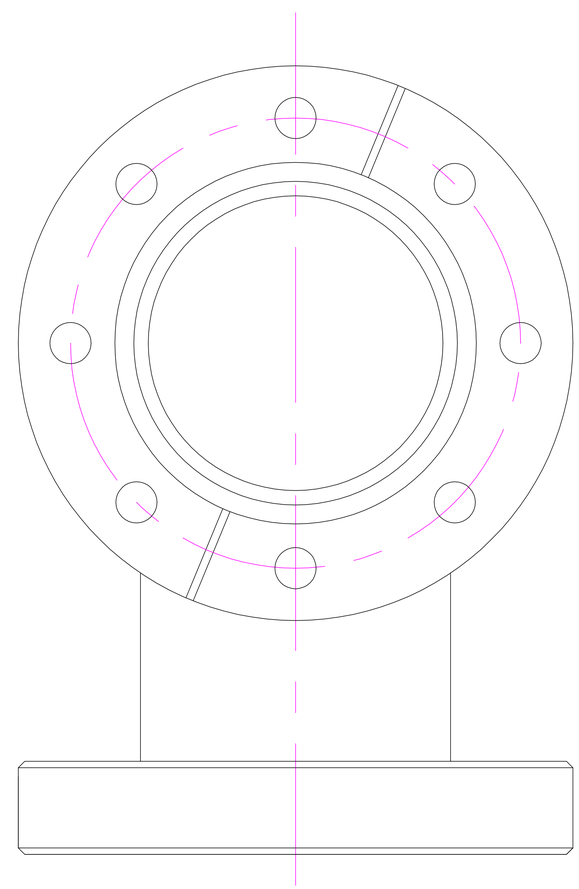

DRAWN BY URIBE	NUCLEAR PHYSICS LABORATORY UNIVERSITY OF ILLINOIS AT URBANA-CHAMPAIGN	4 1/2" ELBOW (MDC 250-SL, 403004)		
CHECKED BY	UNLESS OTHERWISE SPECIFIED	PART NO.	SCALE 1=1	FILE 15
	DIMENSIONS IN INCHES 2 PLACE DEC. ±.01	NO. REQ'D.		
APPROVED BY	BREAK SHARP CORNERS 3 PLACE DEC. ±.003	CHASSIS NO. OR MATERIAL	DATE 10-18-91	DWG. NO. C-2709-124
	FRACTIONAL±1/32" ANGULAR±0°30'			