REV.	DATE	DESCRIPTION	BY	APP'D

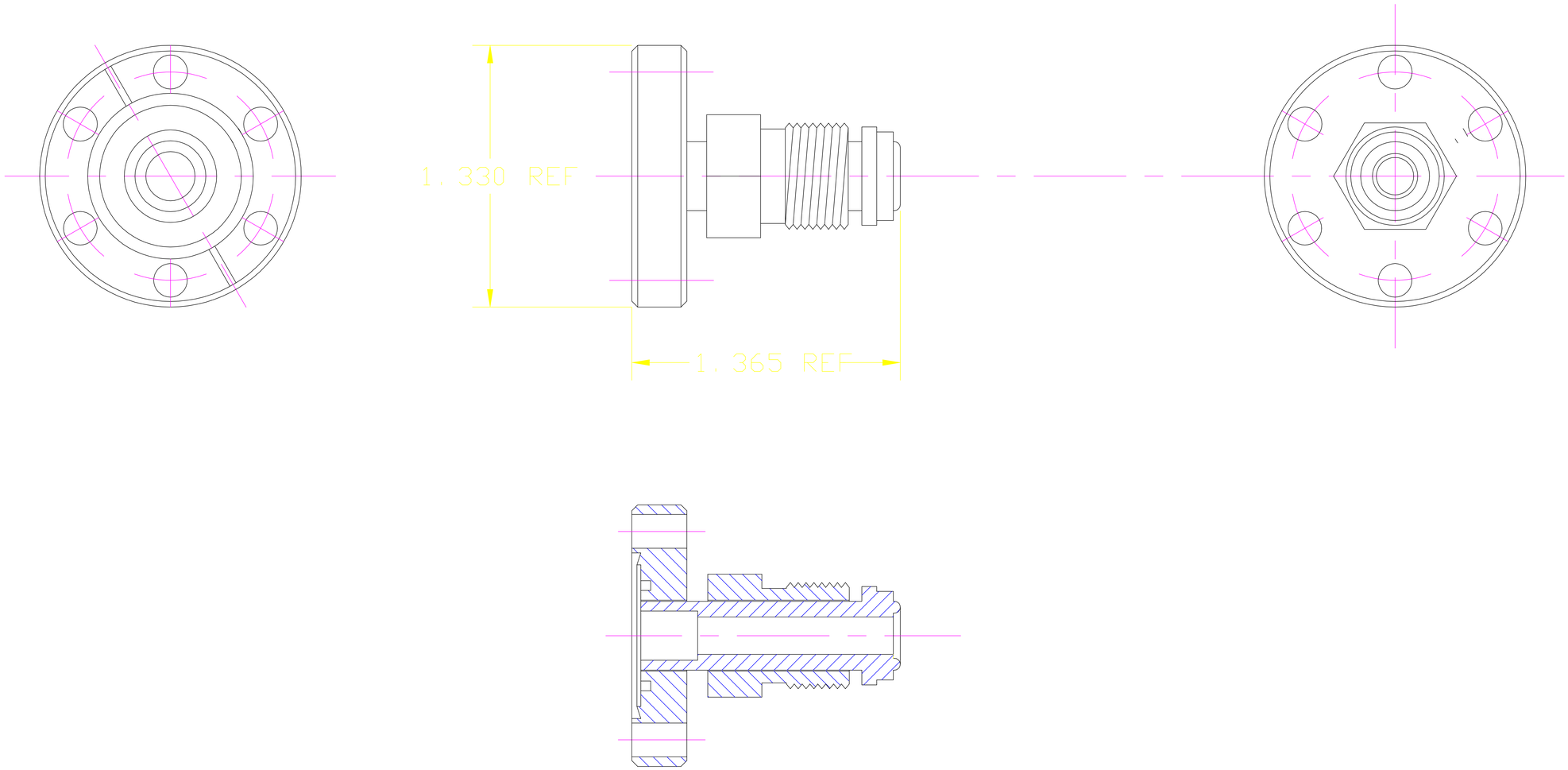

NOTES:

PART NO.: MDC VCR 25-133
P/N 414006

DRAWN BY URIBE	NUCLEAR PHYSICS LABORATORY UNIVERSITY OF ILLINOIS AT URBANA-CHAMPAIGN	VCR TO MINI CONFLAT ADAPTER		
CHECKED BY	UNLESS OTHERWISE SPECIFIED	PART NO.	SCALE 2=1	FILE 15
APPROVED BY	DIMENSIONS IN INCHES 2 PLACE DEC. ±.01 BREAK SHARP CORNERS 3 PLACE DEC. ±.003 FRACTIONAL±1/32" ANGULAR±0°30'	NO. REQ'D. CHASSIS NO. OR MATERIAL	DATE 1-7-92	DWG. NO. C-2709-118