REV.	DATE	DESCRIPTION	BY	APP'D

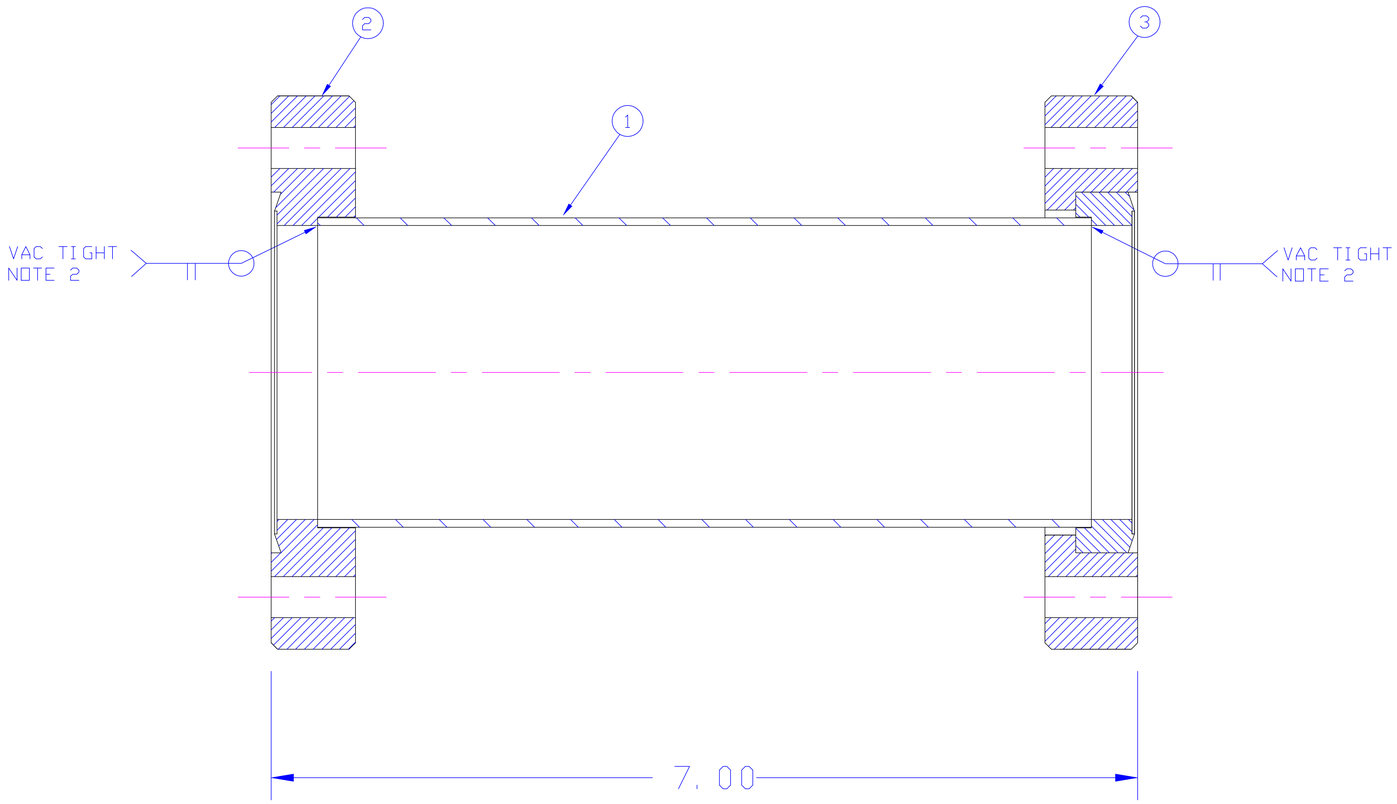

NOTES

1. ALL MACHINING TO BE DONE WITH SULFUR-FREE CUTTING OIL.

2. WELD FLANGES AFTER CLEANING FOR UHV

ITEM	PART NO.	DESCRIPTION	QTY.
3	F450250R	MDC 4 1/2" CONFLAT ROTATABLE FLANGE	1
2	F450250	MDC 4 1/2" CONFLAT NONROTATABLE FLANGE	1
1		2.50 DIA, .062 WALL 304 SS SEAMLESS TUBING, 6.25 LONG	

DRAWN BY: URIBE

CHECKED BY:

APPROVED BY:

NUCLEAR PHYSICS LABORATORY

UNIVERSITY OF ILLINOIS AT URBANA-CHAMPAIGN

UNLESS OTHERWISE SPECIFIED

DIMENSIONS IN INCHES 2 PLACE DEC. ±.01

BREAK SHARP CORNERS 3 PLACES DEC. ±.003

FRACTIONAL±1/32" ANGULAR±0°30'

GETTER PUMP 7.00" NIPPLE

PART NO.

NO. REQ'D.

CHASSIS NO. OR MATERIAL

SCALE: 1=1

FILE: 15

DATE: 10-17-91

DWG. NO.: C-2709-116