REV.	DATE	DESCRIPTION	BY	APP'D
1	5-91	CORRECTED TOP VIEW	URIBE	

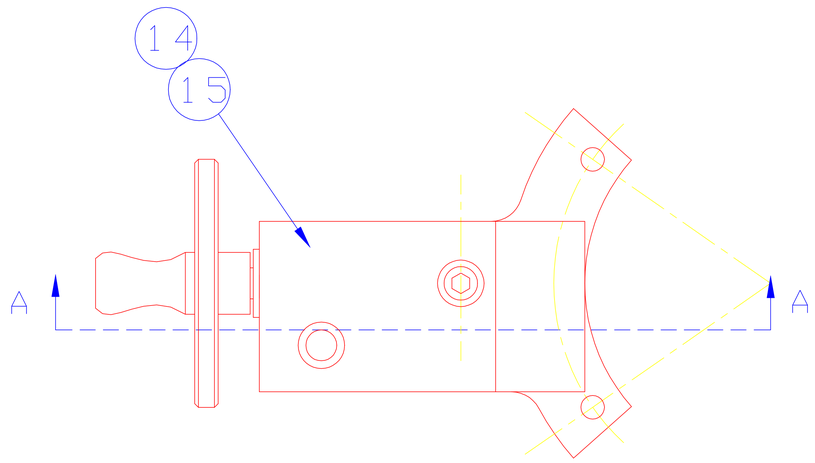

TOP VIEW

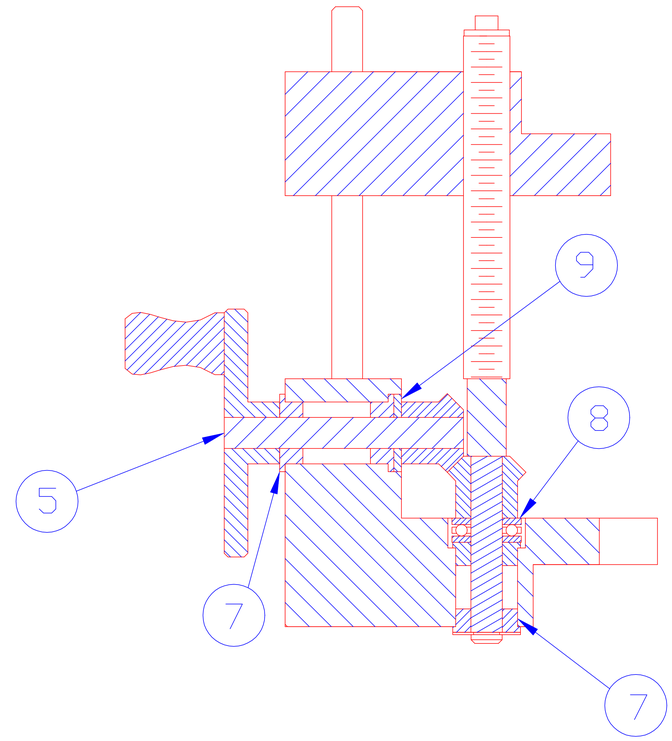

SECTION A-A

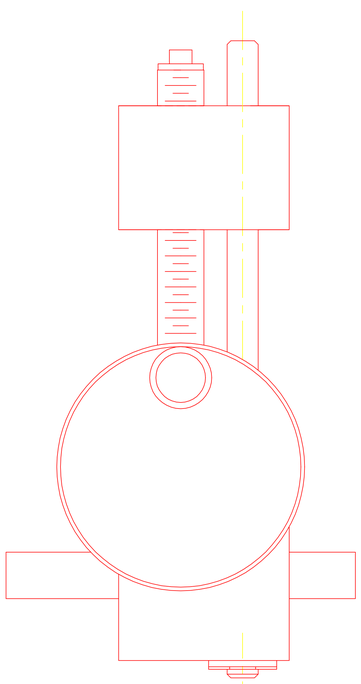

BACK VIEW

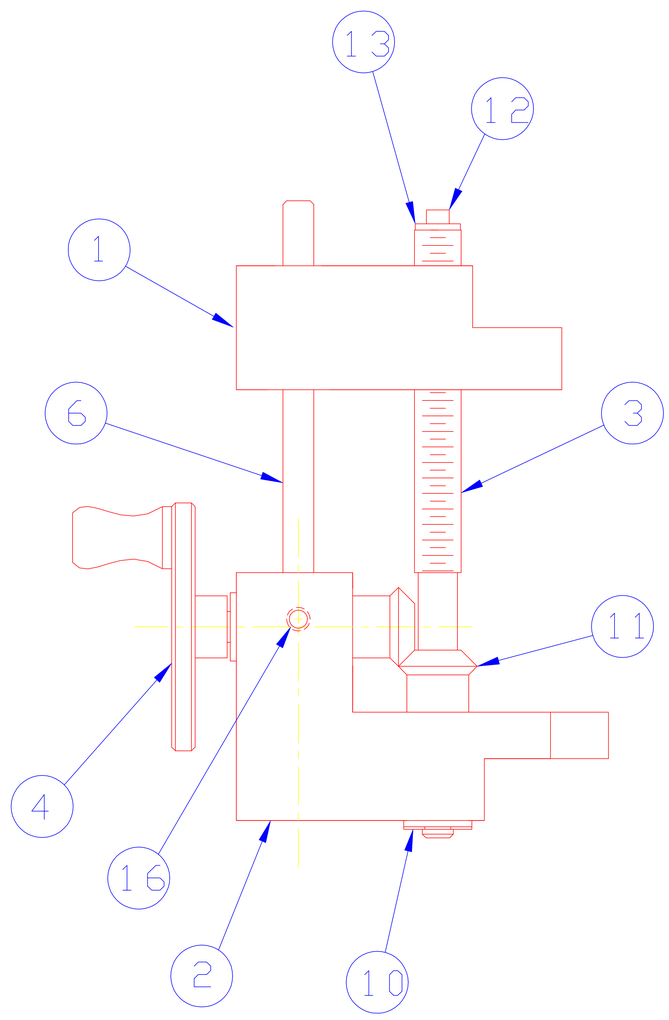

SIDE VIEW

ITEM	PART NO.	DESCRIPTION	QTY
16	SC6-5	#10-32 SILVER TIP SET SCREW (BERG)	1
15	A-4812 SS	THOMSON BALL BUSHING	1
14	Q4-50	INTERNAL RETAINER RING(BERG)	1
13		1/4" ID SS WASHER	1
12		#4-40×3/8 LG SS SOC HD CAP SCREW	1
11	M48N-1	MITER & BEVEL GEAR SET (BERG)	1
10	Q1-25	RETAINER RING SS (BERG)	1
9	CD1-3-SS	SS THRUST WASHERS (BERG)	1
8	B5-3-SS	THRUST BEARINGS (BERG)	1
7	B4-22	FLANGED OIL-LESS BEARING (BERG)	4
6	S4-50	1/4" GROUND SHAFT, 5" LG. (BERG)	1
5	S4-18	1/4" GROUND SHAFT, 1.875" LG(BERG)	1
4	CN2-9	KNURLED HANDCRANK (BERG)	1
3	C-2709-110	STALK ACTUATOR LEAD SCREW	1
2	C-2709-111	STALK ACTUATOR BASE	1
1	C-2709-112	STALK ACTUATOR TOP PLATE	1

DRAWN BY URIBE	NUCLEAR PHYSICS LABORATORY UNIVERSITY OF ILLINOIS AT URBANA-CHAMPAIGN	STALK ACTUATOR SUB-ASSEMBLY		
CHECKED BY	UNLESS OTHERWISE SPECIFIED DIMENSIONS IN INCHES 2 PLACE DEC. ±.01 BREAK SHARP CORNERS 3 PLACE DEC. ±.003 FRACTIONAL±1/32" ANGULAR±0°30'	PART NO.	SCALE 1=1	FILE 15
		NO. REQ'D.		
APPROVED BY		CHASSIS NO. OR MATERIAL	DATE 3-26-91	DWG. NO. C-2709-113