REV.	DATE	DESCRIPTION	BY	APP'D

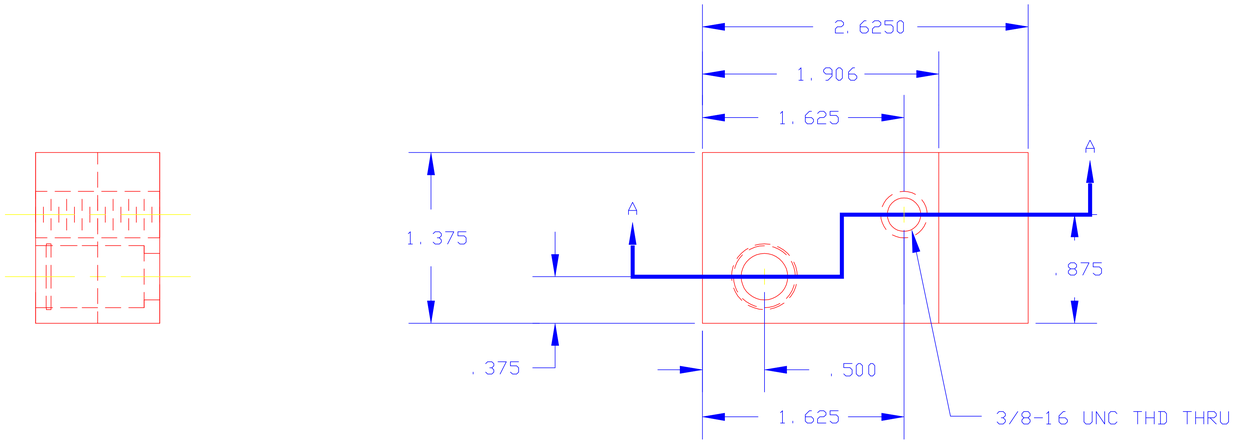

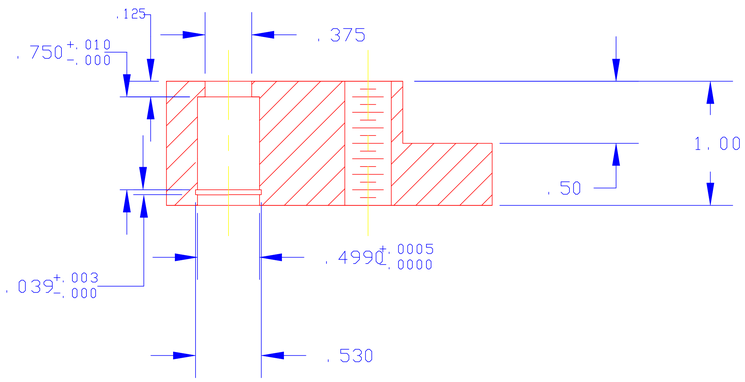

SECTION A-A

DRAWN BY VANCE	NUCLEAR PHYSICS LABORATORY UNIVERSITY OF ILLINOIS AT URBANA-CHAMPAIGN	STALK ACTUATOR TOP PLATE		
CHECKED BY	UNLESS OTHERWISE SPECIFIED	PART NO.	SCALE 1=1	FILE
	DIMENSIONS IN INCHES 2 PLACE DEC. ±.01	NO. REQ'D.		
APPROVED BY	BREAK SHARP CORNERS 3 PLACES DEC. ±.003	CHASSIS NO. OR MATERIAL	DATE 6-13-89	DWG. NO. C-2709-112
	FRACTIONAL ±1/32" ANGULAR ±0°30'			