REV.	DATE	DESCRIPTION	BY	APP'D

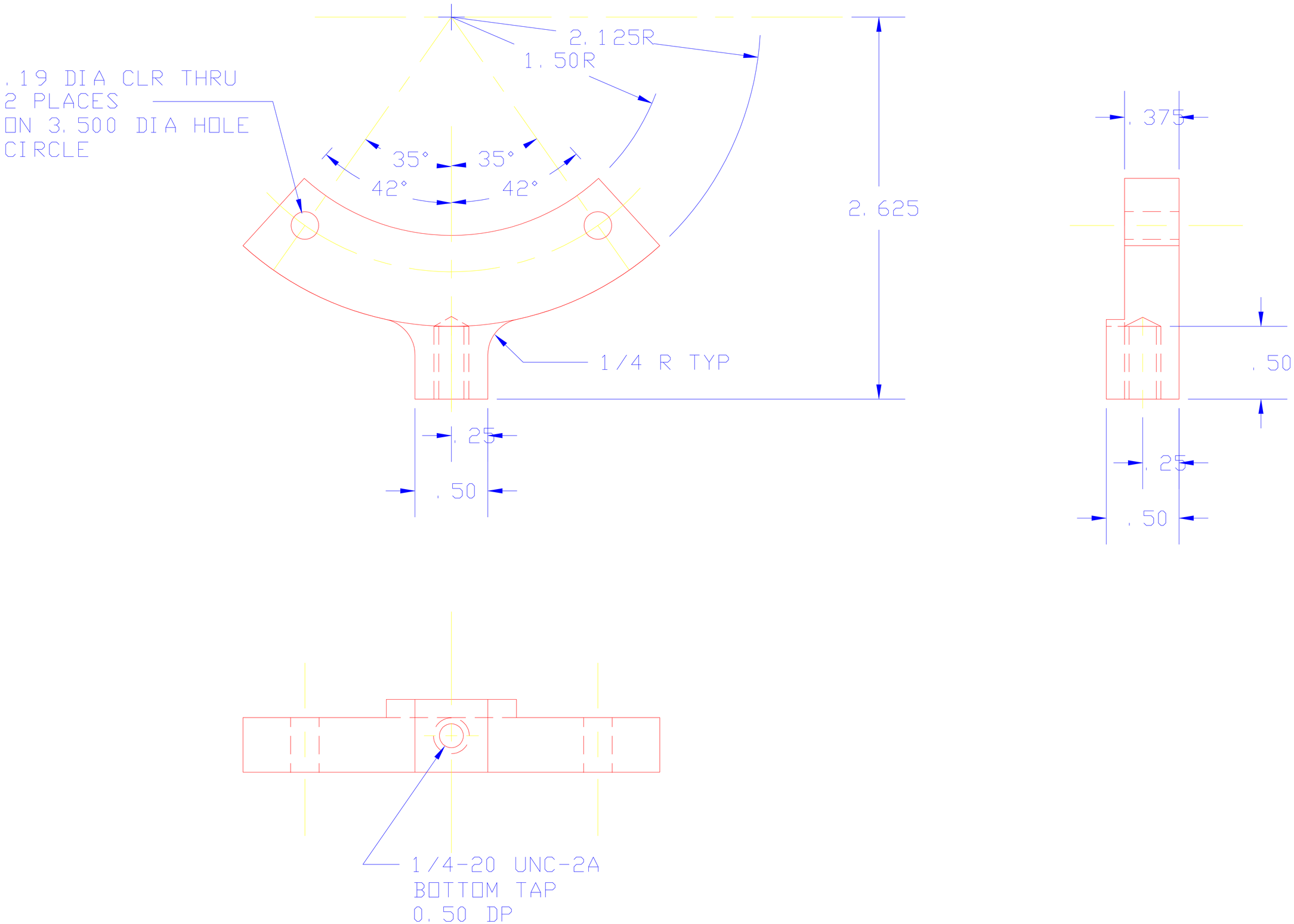

DRAWN BY VANCE	NUCLEAR PHYSICS LABORATORY UNIVERSITY OF ILLINOIS AT URBANA-CHAMPAIGN	CESIATOR ACTUATOR PUSH-POST BRACKET		
CHECKED BY	UNLESS OTHERWISE SPECIFIED	PART NO.	SCALE 2=1	FILE 15
	DIMENSIONS IN INCHES 2 PLACE DEC. ±.01	NO. REQ'D.		
APPROVED BY	BREAK SHARP CORNERS 3 PLACES DEC. ±.003 FRACTIONAL ±1/32" ANGULAR ±0°30'	CHASSIS NO. OR MATERIAL 6061 ALUMINUM	DATE 7-7-89	DWG. NO. C-2709-107