REV.	DATE	DESCRIPTION	BY	APP'D

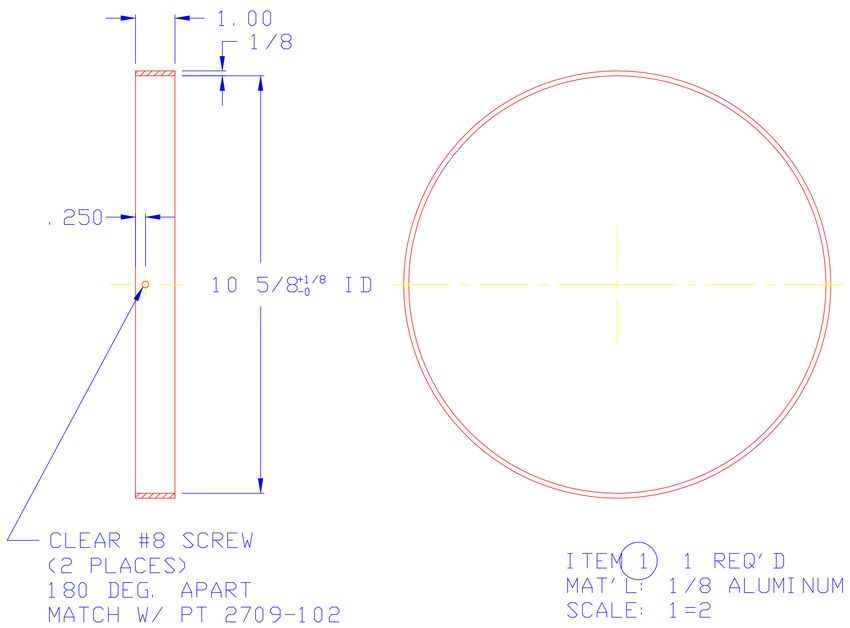

ITEM (1) 1 REQ'D
MAT'L: 1/8 ALUMINUM
SCALE: 1=2

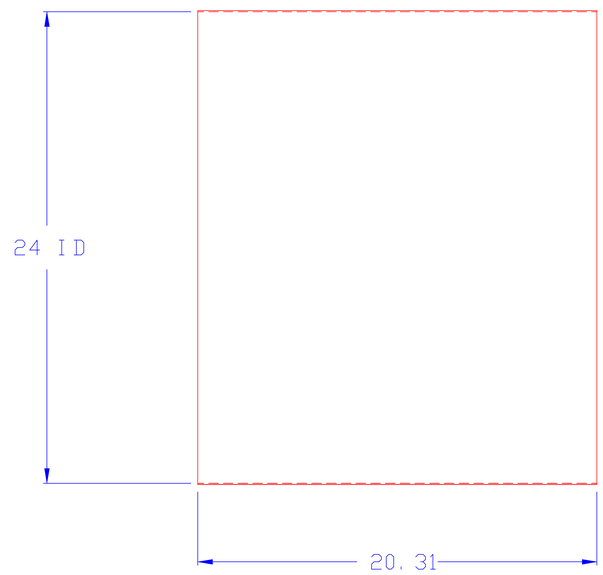

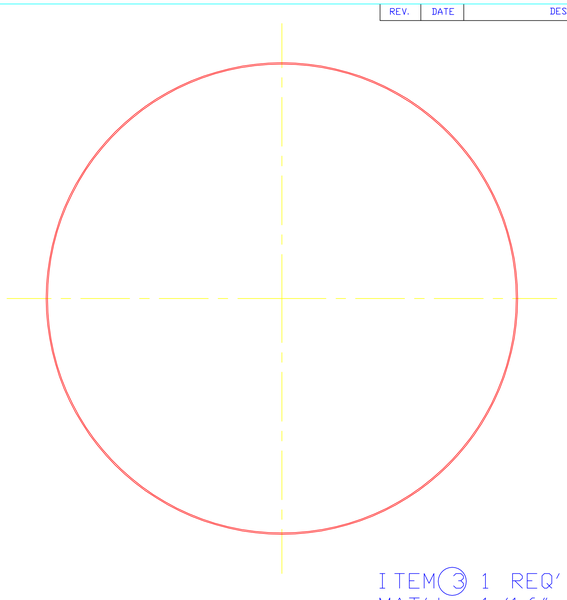

ITEM (3) 1 REQ'D
MAT'L: 1/16" ALUMINUM
SCALE: 1=4

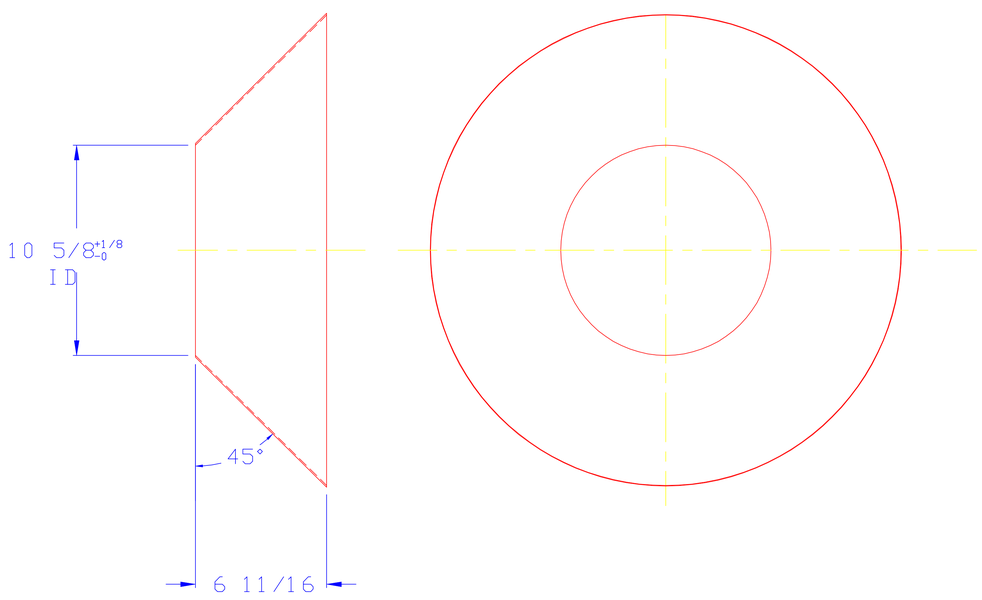

ITEM (2) 1 REQ'D
MAT'L: 1/16 ALUMINUM
SCALE: 1=4

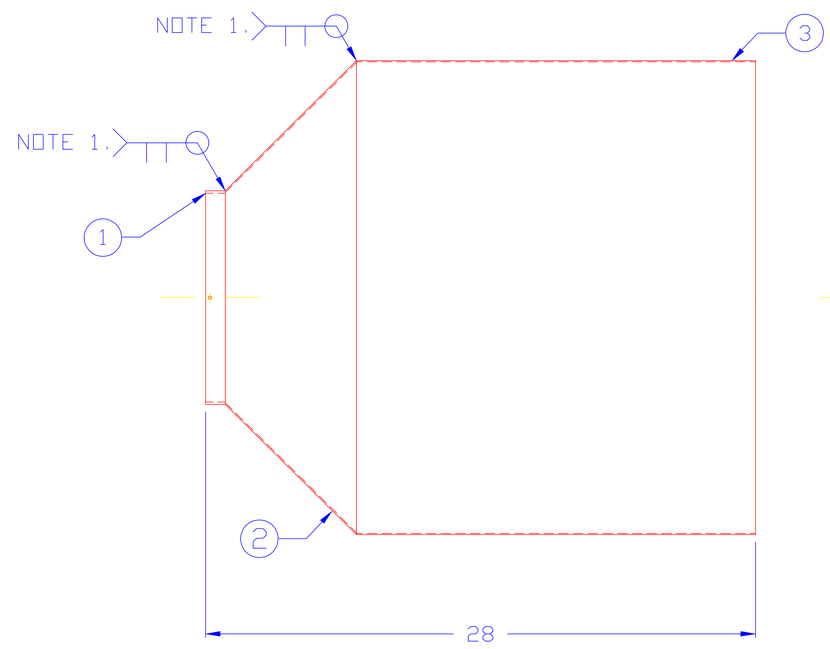

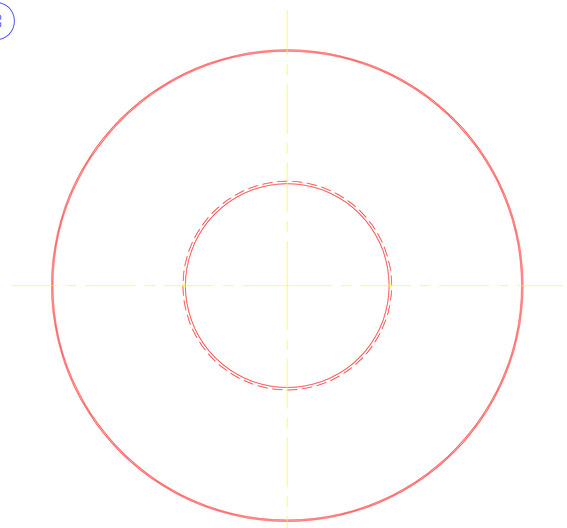

ASSEMBLY
SCALE: 1=4

NOTE: ALL JOINTS MUST BE WELDED SMOOTHLY, WITH NO SHARP "SPIKES" ON THE INTERNAL SURFACE. CONTINUOUS HELI-ARC AND GRIND SMOOTH AS REQ'D.

DRAWN BY VANCE	NUCLEAR PHYSICS LABORATORY UNIVERSITY OF ILLINOIS AT URBANA-CHAMPAIGN	ELECTROSTATIC SHIELD		
CHECKED BY	UNLESS OTHERWISE SPECIFIED DIMENSIONS IN INCHES 2 PLACE DEC. ±.01 BREAK SHARP CORNERS 3 PLACES DEC. ±.003 FRACTIONAL±1/32' ANGULAR±0°30'	PART NO. NO. REQ'D.	SCALE AS NOTED	FILE 15
APPROVED BY		CHASSIS NO. OR MATERIAL 1/16" ALUMINUM	DATE 7-7-89	DWG. NO. D-2709-103