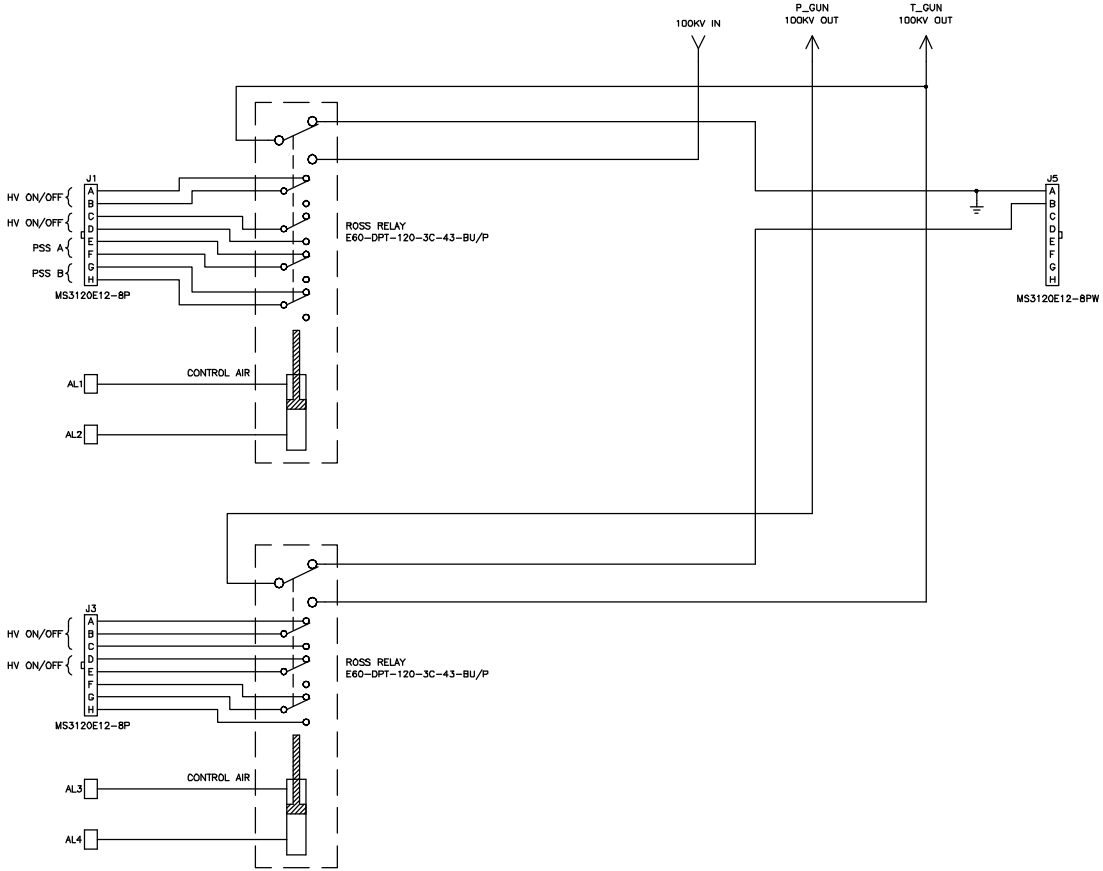

NOTES:

1. FOR BLOCK DIAGRAM OF UNIFIED HIGH VOLTAGE CONTROL SYSTEM HIGH VOLTAGE SWITCH MODULE SEE JEEFERSON LAB DWG. NO. C0471C01.
2. FOR ASSEMBLY DETAILS OF UNIFIED HIGH VOLTAGE CONTROL SYSTEM HIGH VOLTAGE SWITCH MODULE SEE JEFFERSON LAB DWG. NO. C0463E01.
3. FOR FABRICATION DETAILS OF UNIFIED HIGH VOLTAGE CONTROL SYSTEM HIGH VOLTAGE SWITCH MODULE SEE JEFFERSON LAB DWG. NO. C0475E01.
4. FOR WIRING DIAGRAM OF UNIFIED HIGH VOLTAGE CONTROL SYSTEM HIGH VOLTAGE SWITCH MODULE CONTROL CHASSIS SEE JEFFERSON LAB DWG. NO. C0473D01.

REV.	REMARKS	DRAWN	DATE	APPVD
A	REVISED PER ECO E0578	JCW	08/25/98	

TITLE: CONTROLS
UNIFIED HIGH VOLTAGE SYSTEM
HIGH VOLTAGE SWITCH MODULE
WIRING DIAGRAM

DRAWN: D. WILLIAMS	DATE: 4/6/98	Thomas Jefferson National Accelerator Facility, Operated by Jefferson Lab, United States Department of Energy
CHECKED: C. COX	DATE: 4/6/98	
APPROVED/DESIGNED: G. ARNOLD	DATE: 5/4/98	CAD LD NO.: \AC\CONT\C0472\C0472W1.DWG
DRAFTER: C. COX		SIZE: D
SCALE: —	SHEET ON: —	DRAWING NO.: C0472D01
		REV.: A
		SHEET 1 OF 1