REVISION HISTORY				
ZONE	REV.	DESCRIPTION	DATE	APPROVED
	J	INCORP. ECO #1021. JRS JUN02	08AUG02 08AUG02	W.OREN S.Suhring
	K	INCORP. ECO #1031. JRS NOV03	14JAN04 14JAN04 14JAN04	S.Suhring H. Areli W. Kellner
	L	INCORP. ECO #1032. JRS JUL04	08OCT04 12OCT04 13OCT04	S.Suhring H. Areli W. Kellner
	M	INCORP. ECO #1034. JRS MAR05	16NOV05 01DEC05 07DEC05	W. Kellner H. Areli S.Suhring
	N	INCORP. ECO #1035. CKD TW 30MAR06 JRS MAR06	07APR06 10APR06 18APR06	W. Kellner H. Areli S.Suhring
	P	INCORP. ECO #1036. JRS JUL06	28AUG06 13SEP06 10JAN07	W. Kellner H. Areli S.Suhring
	Q	INCORP. ECO #10xx. JRS SEP07		

PRELIMINARY
17SEP07

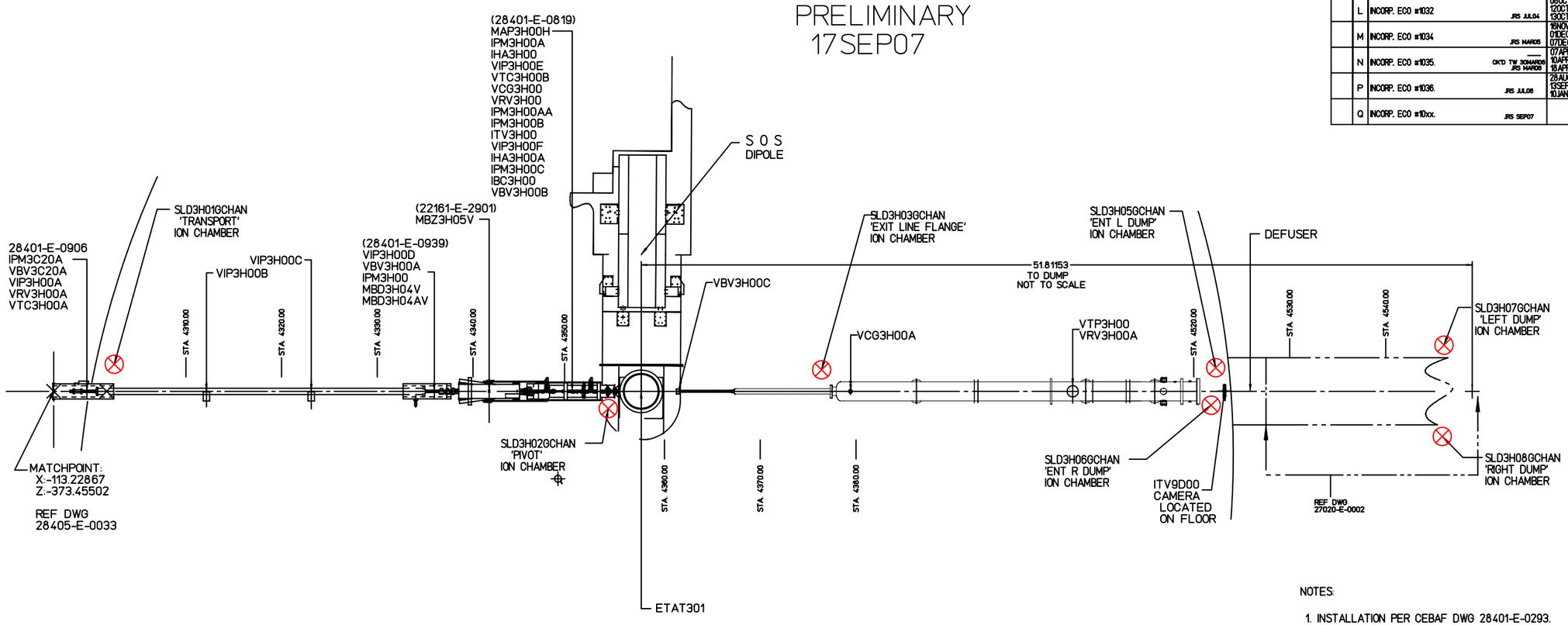

NOTES:

1. INSTALLATION PER CEBAF DWG 28401-E-0293.
2. 'SOS' DIPOLE IS LOCATED FOR DRAWING CLARITY NOT TRUE POSITIONING.
3. SCATTERING CHAMBER & BEAM LINE INSTALLED PER DWG 57153-56001.

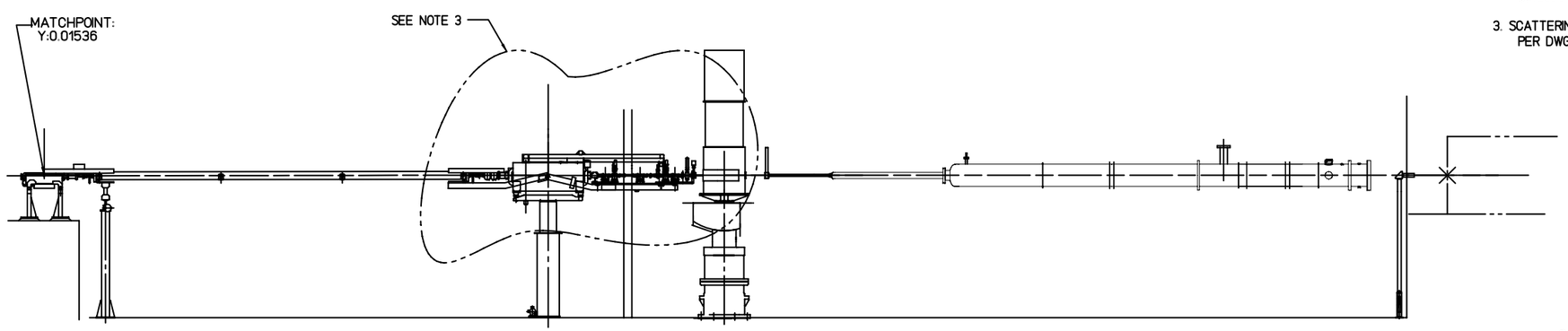

LEGEND

(Indicating Lowest Energy Line Shown)

- 0I - Injector
- 0L - Pre-accelerator
- 2R - Second Recombiner
- 1L - First Linac
- 1S - First Spreader
- 1E - First Extractor
- 1A - First Arc
- 1R - First Recombiner
- 2L - Second Linac
- 2S - Second Spreader
- 2E - Second Extractor
- 2A - Second Arc
- 2C - Transport Channel

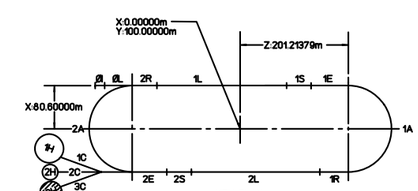

KEY PLAN

0 5 10 20

GRAPHIC SCALE - FEET

AREA	SIGNATURE	DATE
VAC	Scott Williams	05/12/96
INSTR	Karel Capek	05/14/96
MAG	Mark Wiseman	05/14/96
OPS	Steve Suhring	05/14/96
ALIGN	Chris Curtis	05/06/96

DIM & TOL PER ASME Y14.5M-1994 UNLESS OTHERWISE SPECIFIED DIMENSIONS ARE IN INCHES TOLERANCES ARE: FRACTIONS ± N/A DECIMAL .X ± N/A .XX ± N/A .XXX ± N/A ANGLES ± N/A

MATERIAL N/A

FINISH N/A UNLESS OTHERWISE NOTED

DEBURR & BREAK ALL SHARP EDGES

DO NOT SCALE DRAWING

CADD I.D. NO. 284050038revQ

APPROVALS	DATE
DRAWN JACKI R. SMITH	12/09/95
CHECKED Chris Graves	05/03/96
APPROVED W. OREN	05/16/96
APPROVED SEE LEFT	—

CEBAF
The Continuous Electron Beam Accelerator Facility
NEWPORT NEWS, VIRGINIA
UNITED STATES DEPARTMENT OF ENERGY

BEAM TRANSPORT
MACHINE CONFIGURATION
LINE 'C'- HALL 'C'

SIZE E | DWG NO. 28405-E-0038 | REV. Q

SCALE 1/48 | USED ON ASSY NO. 28401-E-0001 | SHEET 1 OF 1

Mar10